Colour Television

Chassis

L7.3A

AA

Service
Service
Service

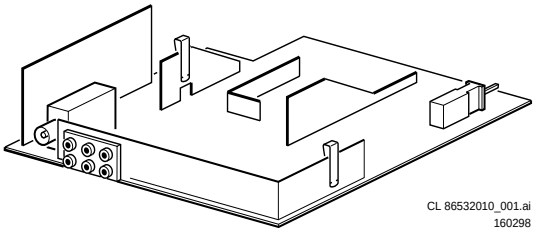

CL 86532010_001.ai
160298

Service Manual

Content

1	Technical specifications			2
2	Connection facilities, location of panels			3
3	Safety instructions, Warnings and Notes			4
4	Mechanical instructions			6
5	Repair facilities			7
	Software adjustments and Hotel mode			12
6	Block diagram,			13
	Survey of testpoints			14
	Diagram supply voltages survey			
7	Electrical Diagrams and print lay-outs			
			Diagram	*PWB*
	Main PWB layout			16
	Power supply	diagram A1	17	16
	Main PWB layout			18
	Line drive	diagram A2	19	18
	Sync-frame & vertical drive	diagram A3	20	18
	Video Processing	diagram A4	21	18
	Control	diagram A5	22	18
	Sound processing	diagram A6	23	18
	Sound amplifier	diagram A7	24	18
	BTSC decoding	diagram A8	25	18
	CRT PWB/ Audio sound PWB			26
	CRT module	diagram B	27	26
	Nicam sound panel	diagram C	28	26
8	Electrical adjustments		29	
9	Circuit Descriptions new circuits		31	
10	Directions for use (limited)		38	
11	List of abbreviations		46	
12	Spareparts list		47	

©Copyright reserved 1998 Philips Consumer Electronics B.V. Eindhoven, The Netherlands. All rights reserved. No part of this publication may be reproduced, stored in a retrieval system or transmitted, in any form or by any means, electronic, mechanical, photocopying, or otherwise without the prior permision of Philips.

Published by LV 9864 TV Service Department Printed in The Netherlands Subject to modification GB 4822 727 21566

PHILIPS

1 Technical specifications

Mains Voltage:	:	150 - 276 Volt
	:	90 - 276 Volt
Mains frequency	:	50 Hz
	:	60 Hz
Power Consumption in stand-by	:	< 10 Watt
Power Consumption normal mode	:	25” : 75Watt +/- 10%
	:	29” : 90 Watt +/- 10%
Chassis mains isolated	:	Yes
Aerial input impedance TV	:	75 Ohm - coax
Picture tube range	:	25” and 29”
EHT voltage for 25”	:	27 KVolt
EHT voltage for 29”	:	30 KVolt
Max EHT power	:	Linitted at 33 Watt
Sound output power	:	2 X 3 Watt
	:	2 X 5 Watt
Picture S/N at 70uVolts	:	> 46 dB unweighted
	:	> 53 dB weigted

2 Connection facilities

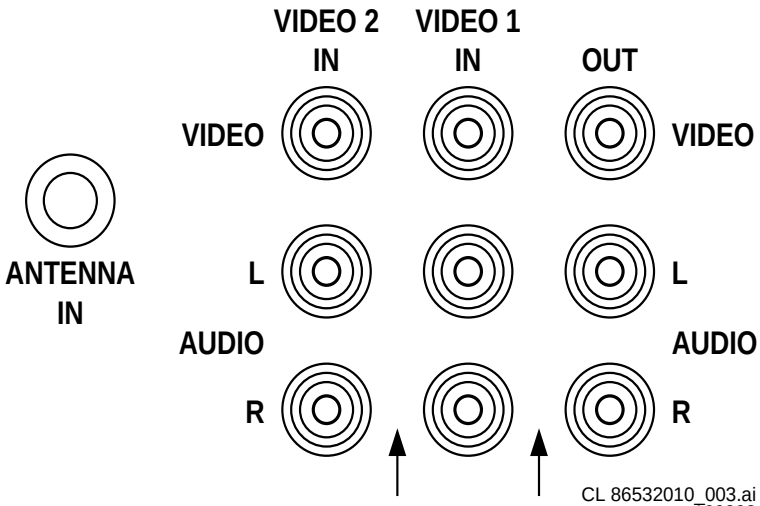

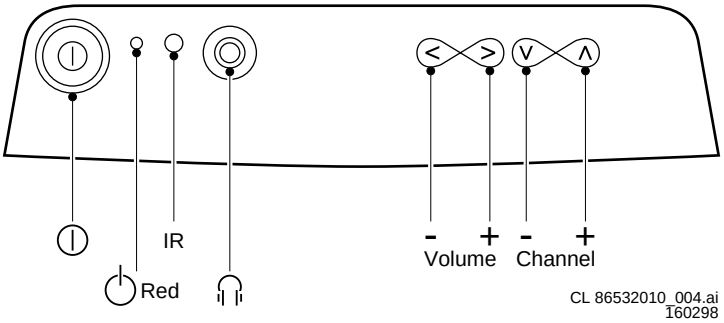

2.1 Cinch

- Video 1Vpp/75Ω
- Audio L(0.5Vrms ≥10kΩ)
- Audio R(0.5Vrms ≥10kΩ)

2.2 Head phone

- (8 - 600Ω / 4mW)

2.3 Location of panels

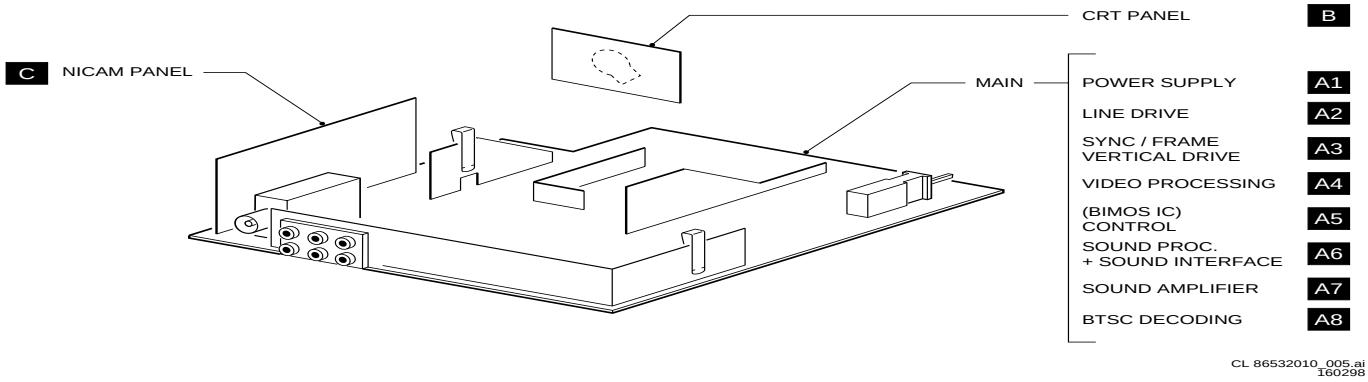

3 Safety instructions, Maintenance instruction,

3.1 Safety instructions for repairs

Figure 3-1

1. Safety regulations require that during a repair:
   – the set should be connected to the mains via an isolating transformer;
   – safety components, indicated by the symbol (see fig. 3.1), should be replaced by components identical to the original ones;
   – when replacing the CRT, safety goggles must be worn.

2. Safety regulations require that after a repair the set must be returned in its original condition. In particular attention should be paid to the following points.
   – As a strict precaution, we advise you to resolder the solder joints through which the horizontal deflection current is flowing, in particular:
     • all pins of the line output transformer (LOT);
     • fly-back capacitor(s);
     • S-correction capacitor(s);
     • line output transistor;
     • pins of the connector with wires to the deflection coil;
     • other components through which the deflection current flows.

     Note: This resoldering is advised to prevent bad connections due to metal fatigue in solder joints and is therefore only necessary for television sets older than 2 years. The wire trees and EHT cable should be routed correctly and fixed with the mounted cable clamps.

   – The insulation of the mains lead should be checked for external damage.
   – The mains lead strain relief should be checked for its function in order to avoid touching the CRT, hot components or heat sinks.
   – The electrical DC resistance between the mains plug and the secondary side should be checked (only for sets which have a mains isolated power supply). This check can be done as follows:
     • unplug the mains cord and connect a wire between the two pins of the mains plug;
     • set the mains switch to the on position (keep the mains cord unplugged!);
     • measure the resistance value between the pins of the mains plug and the metal shielding of the tuner or the aerial connection on the set. The reading should be between 4.5 MW and 12 MW;
     • switch off the TV and remove the wire between the two pins of the mains plug.

   – The cabinet should be checked for defects to avoid touching of any inner parts by the customer.

3.2 Maintenance instruction

It is recommended to have a maintenance inspection carried out by a qualified service employee. The interval depends on the usage conditions:

– When the set is used under normal circumstances, for example in a living room, the recommended interval is 3 to 5 years.
– When the set is used in circumstances with higher dust, grease or moisture levels, for example in a kitchen, the recommended interval is 1 year.
– The maintenance inspection contains the following actions:
  • Execute the above mentioned 'general repair instruction'.
  • Clean the power supply and deflection circuitry on the chassis.
  • Clean the picture tube panel and the neck of the picture tube.

3.3 Warnings

1. ESD
   All ICs and many other semiconductors are susceptible to electrostatic discharges (ESD). Careless handling during repair can reduce life drastically. When repairing, make sure that you are connected with the same potential as the mass of the set by a wristband with resistance. Keep components and tools also at this same potential.
   – Available ESD protection equipment:
   – anti-static table mat (large 1200x650x1.25mm) 4822 466 10953
   – anti-static table mat (small 600x650x1.25mm) 4822 466 10958
   – anti-static wristband 4822 395 10223
   – connection box (3 press stud connections, 1 M ohm) 4822 320 11307
   – extension cable (2 m, 2 M ohm; to connect wristband to connection box) 4822 320 11305
   – connecting cable (3 m, 2 M ohm; to connect table mat to connection box) 4822 320 11306
   – earth cable (1 M ohm; to connect any product to mat or connection box) 4822 320 11308
   – complete kit ESD3 (combining all 6 prior products - small table mat) 4822 310 10671
   – wristband tester 4822 344 13999
2. In order to prevent damage to ICs and transistors, all high-voltage flashovers must be avoided. In order to prevent damage to the picture tube, the method shown in Fig. 3.2 should be used to discharge the picture tube. Use a high-voltage probe and a multimeter (position DC-V). Discharge until the meter reading is 0V (after approx. 30s).
3. Together with the deflection unit and any multipole unit, the flat square picture tubes used from an integrated unit. The deflection and the multipole units are set optimally at the factory. Adjustment of this unit during repair is therefore not recommended.
4. Be careful during measurements in the high-voltage section and on the picture tube.
5. Never replace modules or other components while the unit is switched on.
6. When making settings, use plastic rather than metal tools. This will prevent any short circuits and the danger of a circuit becoming unstable.
7. Wear safety goggles during replacement of the picture tube

3.4 Notes

1. The direct voltages and oscillograms should be measured with regard to the tuner earth , or hot earth as this is called (see fig. 3.3)
2. The direct voltages and oscillograms shown in the diagrams are indicative and should be measured in the Service Default Mode (see chapter 8) with a colour bar signal and stereo sound (L:3 kHz, R:1 kHz unless stated otherwise) and picture carrier at 475.25 MHz.

3. Where necessary, the oscillograms and direct voltages are measured with and without aerial signal. Voltages in the power supply section are measured both for normal operation and in standby . These values are indicated by means of the appropriate symbols (see fig. 3.3).
4. The picture tube PWB has printed spark gaps. Each spark gap is connected between an electrode of the picture tube and the Aquadag coating.
5. The semiconductors indicated in the circuit diagram and in the parts lists are completely interchangeable per position with the semiconductors in the unit, irrespective of the type indication on these semiconductors.

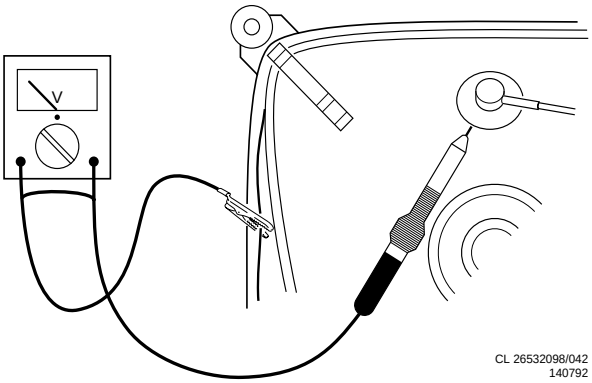

Figure 3-2

tuner earth tuner aarde la masse du tuner Tuner-Erde massa del tuner tierra del sintonizador	hot earth hete aarde la terre directe heißen Erde massa calda tierra caliente
with aerial signal met antenne signaal avec signal d'antenne mit Antennensignal con segnale d'antenna con la señal de antena	without aerial signal zonder antenne signaal sans signal d'antenne .ohne Antennensignal senza segnale d'antenna sin la señal de antena
normal condition normaal bedrijf fonctionnement normal normaler Betrieb funzionamento normale funcionamiento normal	stand by stand by position de veille in Bereitschaft modo di attesa posición de espera

Figure 3-3

4 Mechanical instructions

For the service position of the main carrier see figure 4.1:
The main carrier can be removed by releasing the 2 carrier blocking lips (1) and pulling the carrier panel backwards.

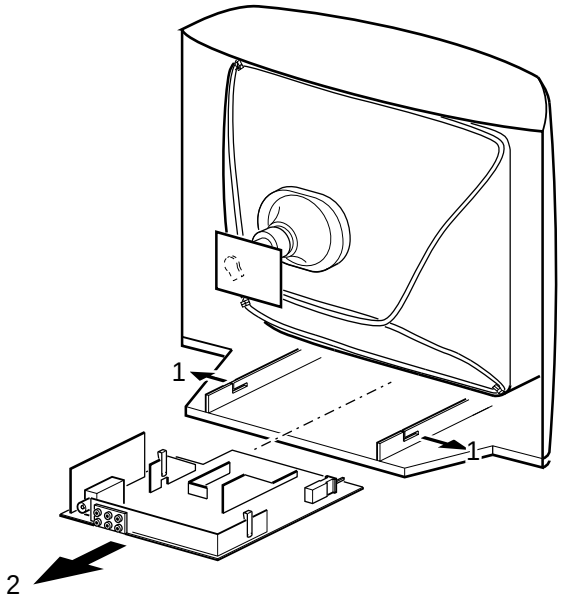

A

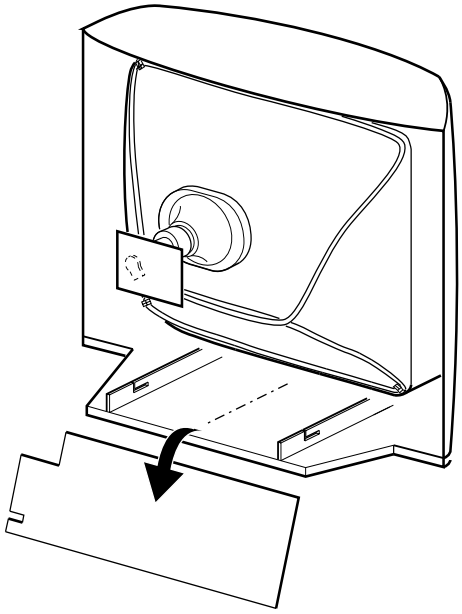

B

CL 86532010_002.ai
160298

Figure 4-1

5 Faultfinding tree & Repair facilities

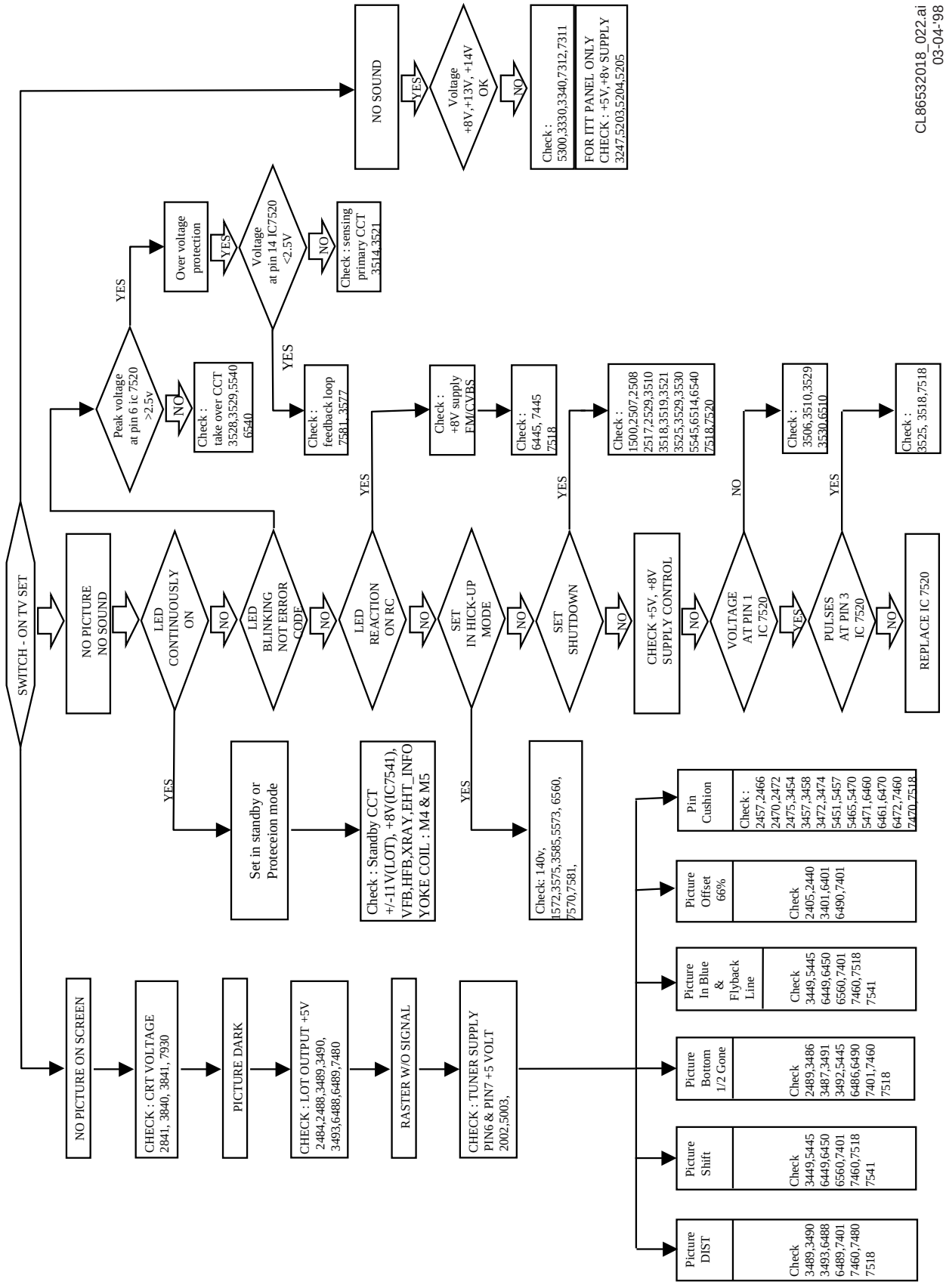

5 Faultfinding tree & Repair facilities

5.1 Repair facilities

5.2 Functional blocks

The PCB has service printing on both sides , so on the copper and the component side. Functional blocks are indicated by lines and text.

Test points are referring to the functional blocks as mentioned above :

– Test pointElectrical function
– P1, P2, etc. :Power supply
– L1, L2, etc. :Line drive and line output
– F1, F2, etc. :Frame drive and frame output
– S1, S2, etc. :Synchronization
– V1, V2, etc.: Video
– A1, A2, etc.: Audio
– C1, C2, etc.:Control
– B1, B2, etc : BTSC stereo decoding
– N1, N2, etc.:NICAM stereo decoding

The numbering is done in for a diagnostics logical sequence.

Example: Checking the power supply, start with test point P1, P2 etc.

5.3 Service mode

The service mode is a pre-defined mode which can be used for faultfinding and adjustments (especially when the TV gives no picture at all you can use the service default mode). All oscillograms and DC voltages in this service manual are measured in the service default mode.

The service mode is split into two parts :

- Service Default Mode (SDM).
- Service Alignment Mode (SAM).

SDM. In the service default mode you are able to carry out (hardware) measurements under pre-defined conditions. To entry the (SDM) Service Default Mode there are two possibilities:

- Via the "DEFAULT" button on the Dealer Service Tool, service codenumber : 4822 218 21232.
- Via Short-circuiting the service pins M24 and M25 on PCB and switching on the set via the mains switch. For M25 and M24 see Diagram A4 and the PWB drawing of the main panel

In the SDM mode a "S" (in green) and the menu (in red) is displayed (see Fig. 1).

SAM. In the SAM mode you are able to align/adjust settings via menu selection. To entry the (SAM) Service Alignment Mode there are two possibilities :

- Via the "ALIGN" button on the Dealer Service Tool
- Via Short-circuiting service pins M28 and M29 on PCB and switching on the set via the mains switch. For M25 and M24 see Diagram A4 and the PWB drawing of the main panel

In the SAM mode a "S" (in green) and the menu (in red) is displayed (see Fig. 2).

REMARKS: After the set is in the service mode the short circuit can be removed.

To leave the Service mode press the stand-by button on the remote control.

REMARKS : After switching off and on the mains switch, the set remains in the service mode (SDM- or SAM mode).

Features are :

- Service settings after entry
- Service (sub) menu selection
- Error buffer display
- Software version and identification display
- Life timer (run timer) display
- Option bytes

5.4 Initial states

The initial state after switching on in service mode for System and Tuning are as follows :

- For Multi-System sets PAL BG/SECAM/DK/NTSC
- For Bi-Norma and Tri-Norma sets NTSC/PAL-M/PAL-N

- For sets with VST tuning : Programme number 1 is selected and the system will be tuned at the tuning data (for programme 1) read from EEPROM
- For sets with PLL tuning : Set is tuned to a frequency of 475.25 MHz.

Further settings :

- The automatic switch off (no IDENT) timer and the sleep timer will be ignored
- The child lock will be disabled.
- If the TV sets was in hotel mode, this mode will be disabled as long as the TV is in service mode.
- Brightness, saturation, sharpness, contrast and balance are initialised to 50% level.
- The volume is set to 25% level.
- The TV is normally controllable.
- All displayed text strings in service mode, so SDM and SAM mode will be displayed in the English language.

Other features

RAM test of the uP (=IC7600) and the NV RAM (=IC7620). At every start-up of the TV, a read after write test for the complete RAM of IC7600 and via I2C the NVRAM (=IC7620) will be performed. If this check fails, the appropriate error number will be written in the error buffer. The patterns will be chosen in such a way that every bit of all bytes, will be written high and low. If the NVRAM is empty default values will be loaded.

5.5 SDM (Service Default Mode)

This menu is being displayed whenever SDM is entered. In this menu the error buffer can be inspected, and the option byte(s) can be (re)programmed. The overview of the menu is shown below :

The MENU UP/DOWN command can be used to select the next/ previous option ; the MENU LEFT/RIGHT command can be used to change the option value.

	S (Service mode)
L73AP21 1.0 (Software version)	9999 (Life timer)

5 Faultfinding tree & Repair facilities

AS (options description)	VALUE	8888 7777 66 (options bytes)
ERR (error buffer)	3 4 3 0 0 (error code)	

Explanation :

L73AP21 1.0: The software identification, version and cluster.
AS: A two character short name for the option to be selected. (see table)
VALUE: The value of the selected option.
ERR: Error buffer display
3 4 3 0 0
S: The character " S " indicates that the TV set is in the service mode.
9999: The hexadecimal value of the life timer.
8888 7777 66: 10 digits of value representation of the option byte contents

5.5.1 Software identification

If there is a change of the software this number will be changed.

5.5.2 Life timer (run timer)

This life timer only counts the normal operations hours and not the stand-by hours. Also at every switch- on the life timer is incremented by 1.

5.5.3 Option code

The possible options are listed in the following table 1:

Error buffer

The last five errors, stored in the NVRAM=EEPROM (IC7620), are shown in the service main menu; this is called the errorbuffer. An error will be added to the buffer if this error differs from the last error in the buffer. The last found error is displayed on the left-side.

Example: Suppose the display shows: 3 4 0 0 0. This means the last found error is error number 3, the last found error but one is error number 4, and so on.

– 40000
– 34000

REMARKS: If the (IC7620=) EEPROM is replaced by a new one the set has to be installed according to the option code. The ERROR BUFFER will be erased when the set is switched from service mode in stand by, or via DST code 99.

Error codes

The following error codes have been defined :

– 0 - No error
– 1 - Internal RAM
– 2 - General 12C error
– 3 - EEPROM Configuration error (Checksum error)
– 4 - I2C error (MSP3410 / TDA9850/TDA9860)
– 5 - I2C error (TDA8374)
– 6 - EEPROM error (ST24C04)
– 7 - I2C error (PLL tuner)

5.5.4 Error code indication via blinking stand by LED

The ERROR code are also indication via blinking of the standby LED. This is important if no OSD function or picture is available. The method is to show that the LED blinks as many as the error code indicates..

Example: Error code 4 will result in four blinks of the LED (0.25 seconds ON and 0.25 seconds OFF).After this sequence the LED will be OFF for 3 seconds and the blinking of the LED is repeated again.

5.5.5 Option abbreviation and Option status.

To select another option abbreviation use the MENU UP/ DOWN buttons and to change the status use the MENU LEFT/ RIGHT buttons.

Elucidation: With above items the option statuses stored in the EEPROM can be changed. This is necessary if the EEPROM is replaced by a fresh EEPROM, because a fresh EEPROM is initial loaded with default options by the uC. The options stored in the factory can differ per type and stroke number. Therefore it is necessary to load the EEPROM with the correct options (configuration). These options are indicated on a sticker glued inside on the rear cover of the set.

Remark: For sets with BTSC sound, also the options TUN.FOA, TUN.FOB, EXT.FOA and EXT.FOB have to be set. See for these items Paragraph 6

Loading a fresh EEPROM

- Switch on the TV via the power switch.
- Audio mute the TV (to get no big noise).
- Change the option codes as indicated on the sticker on the rear cover.
- Put TV in stand by via the remote control.
- Switch on the TV again via the remote control.
- Switch OFF the TV via the power switch
- Switch on the TV again via the power switch.

In the table all the possible option abbreviation with full option name and possible status are listed.

Table 1 : Options description for L7.3 versions.

Full option name	Option name abbreviation	Status Possibilities
Auto cable detect	AC	ON/OFF
AFC Status	AF	ON/OFF
Auto scan	AS	ON/OFF
AVL	AV	ON/OFF
Balance	BL	ON/OFF
Bilingual Mono	BM	ON/OFF
Bass Treble	BT	ON/OFF
Child Lock	CH	ON/OFF
Clock	CK	ON/OFF
Contrast plus	CP	ON/OFF
EW control	EW	ON/OFF

5 Faultfinding tree & Repair facilities

4 : 3 Expend	EX	ON/OFF
Games	GM	ON/OFF
Hospital mode	HS	ON/OFF
Monitor No Ident	NI	ON/OFF
NTSC Play Back	NP	ON/OFF
Spatial	SA	ON/OFF
Sound Board	SB	MA = Mono All
		MM=Multi Mono
		ND = ITT Nicam MSP3410D
		NB = ITT NICAM MSP3410B
		IT = ITT 2CS MSP3400
		50 = TDA 9850
		60 = TDA 9860
		52 = BTSC TDA9852
		55 = BTSC TDA9855
Smart Picture Term Control	SC	ON/OFF
Smart Sound	SS	ON/OFF
Bimos Standby	ST	ON/OFF
Surf	SU	ON/OFF
Multi System	SY	AF = AP FULL MULTI
		SS = SINGLE SYSTEM
		AD = AP DUAL
		AM = AP MULTI
		2N = Binorma
		3N= Trinorma
		4N = Fournorma
Tuner	TN	ON/OFF
Volume Limiter	VL	ON/OFF
Video Mute	VM	ON/OFF
Remote Control	W1	ON/OFF
External 1	XT	ON/OFF
External 2	2X	ON/OFF
TDA884X Family	88	ON/OFF

OPTION code

OPT is the abbreviation of OPTION, this abbreviation refers to the following 12 digit hexadecimal option codes (BFDD FBEF 2C). The option code can not be selected. It only give an quick indication in hexadecimal form of the options settings of the relevant set.

5.6 SAM (Service Alignment Mode)

This menu is being displayed whenever SAM is entered.

In SAM you are able to make tuning adjustments, Alignment of white tone, adjustment of picture geometry, Sound alignment ,VSD and AKB enable/disable (black current loop).

The overview of the menu is shown below :

General: The following items of the sub menus can be selected with the UP(+)/DOWN(-) arrow keys on the user remote control.

Entry into the sub menus is executed with the VOL(+) / VOL(-) arrow keys.

SAM MAINS MENU

		S
AKB	0	
VSD	0	
TUNER	>	
WHITE TONE	>	
GEOMETRY	>	
AUDIO	>	

5.6.1 AKB

With the option AKB the "black current loop" can be enabled or disabled. ON =enabled, OFF = disabled.

5.6.2 TUNER

With the items TUN.FAO and TUN.FOB the speed (time constant) for internal signals is set. The speed can be set to normal, slow or fast. The tuner sub menu contains the following information :

For monitoring during alignment of AGC,YD,CL, IF-PLL, AFW.

All entered data will be send directly to the video one chip; values are stored in EEPROM if this sub menu is left.

		S
	TUNER	
AGC		37
YD		1
CL		0
IF-PLL		61
AFW		80

AFA	1
AFB	1

5.6.3 White tone

The white tone menu contains the following information :

MAIN WHITE TONE MENU

	S
NORMAL RED	37
DELTA COOL RED	0
DELTA WARM RED	0

NORMAL TEMPERATURE SUB MENU

	S
RED	37
GREEN	37
BLUE	39

REMARK :

Only one of the 3 items (RED, GREEN or BLUE) will be display on the screen. Via "scrolling" with the UP/DOWN keys the items can be changed.

- NORMAL: Via this menu the NORMAL colour temperature alignment can be set.
- DELTA COOL : Via this menu the cool colour temperature alignment can be set
- DELTA WARM : Via this menu the normal warm temperature alignment can be set

Changing any of the items red, green or blue can be changed by first pressing the control left/right keys to highlight the desired setting. With the desired setting highlighted, the user can either increment or decrement the setting by using control up/down key respectively. All changed data will be stored into the EEPROM after returning to the service main menu via the OK key.

The initial default value for all setting is 37.

The factory settings of the colour temperatures are :

NORMAL	10500K	R = 37	G = 37	B = 39
DELTA WARM	8200K	R = 0	G = 254	B = 249
DELTA COOL	14000K	R = 0	G = 1	B = 3

DELTA COOL TEMPERATURE SUB MENU

- DELTA COOL RED 0
- DELTA COOL GREEN 1
- DELTA COOL BLUE 3

DELTA WARM TEMPERATURE SUB MENU

- DELTA WARM RED 0
- DELTA WARM GREEN 254
- DELTA WARM BLUE 249

5.6.4 GEOMETRY

The geometry menu contains the following information :

HSH	Horizontal shift
VSL	Vertical slope
VAM	Vertical amplitude
VSH	Vertical shift
VX	Vertical Zoom
VSC	Vertical Scroll
EW	E-W amplitude
PW	E-W parabola/width
CP	E-W cornerparabola
TC	E-W trapezium
SC	S-Correction
SBL	Service blanking
H60	Delta HSH for 60 Hz
V60	Delta VAM for 60 Hz

	S
HSH	32
VSL	32
VAM	32
VSH	34
VX	13
VSC	39
EW	54
PW	46
CP	39
TC	41
SC	52
SBL	0
H60	10
V60	10

Into the picture geometry menu, the first item will be highlighted and displayed. The value can be incremented or decremented by pressing the control right or left key. The rest of the parameters can be scrolled through by using the control up/ down keys.

All changed data will be stored into the EEPROM after returning to the service main menu via the OK key

5.6.5 AUDIO

The sound adjustments sub menu contains the following information :

	S
AUDIO	
AUTO	>
ST-NT	7
SAP-NT	7
LA	7
WIDEB	31
SPECT	31

The TDA9852 sub menu is only available if the BTSC sound IC is present. The settings can be changed by first highlighted the respective item using the control up/down keys and then increment or decrement the value by using the control right or left keys. The default value shown in the diagram are the normal values. For service purposes the normal values can be used

NOTE: The value should not change unless it is absolutely necessary !!!!

5.7 Dealer remote used as a Dealer Service Tool (DST)

With the DST, under mentioned extra service features can be executed.

The main features are :

- Direct entering SDM via the "DEFAULT" button on the DST.
- Direct entering SAM via the "ALIGN" button on the DST.
- Read the error buffer even if the OSD is not working at all. This is done via the blinking LED procedure

REMARKS:

- Entry of the SDM and SAM via the DST is possible in all states, except from stand-by.
- All software is suspended till the dealer remote mode is left.
- The service mode status is left if : the stand-by command is received.

5.8 Downloading of tuning data with the DST

Downloading of tuning data (programme number, frequency and system) via the DST is made possible. This downloading is ONLY possible in the version containing PLL tuning for Europe.

5.9 Blinking LED procedure

Via the DIAGNOSE 1 (for errorbuffer position 1) through the DIAGNOSE 5 (for error 5) commands of the DST, the error buffer can be made visible via the blinking LED. This is useful if the screen is not working properly. The method is to use the LED pulses with as many pulses as the error number, followed by a time period of 3 seconds in which the LED is off. E.g. error code 4 will result in four times the sequence LED on for 0.25 seconds / LED will be off for 0.25 seconds. After this sequence the LED will be off for 3 seconds.

5.10 Hotel-mode

The L7.3 chassis has one special mode, called the hotel mode. In the hotel mode the following occurs:

- Installation menu cannot be entered.
- When entering the hotel mode the maximum volume will be the current value.
- The set will always switch to a selectable channel when set is switched on.

Entering the hotel-mode :

- Select channel 38
- Push the menu button on the local keyboard (vol. + and vol. -) and the OSD-button of the RC simultaneously for 3 seconds; then you are in the hotel mode.

Leaving the hotel mode :

- Same as entering the hotel mode.

The OSD will display the hotel mode "on" or "off".

HOTEL MODE SUB MENU " ON "

38	HOTEL ON
HOTEL CHANNEL	38
BLANK FROM	6
TO	6

HOTEL MODE SUB MENU " OFF "

38	HOTEL OFF

6 Block diagram

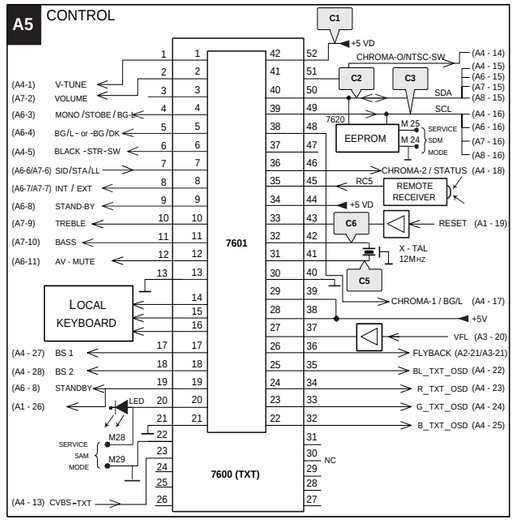

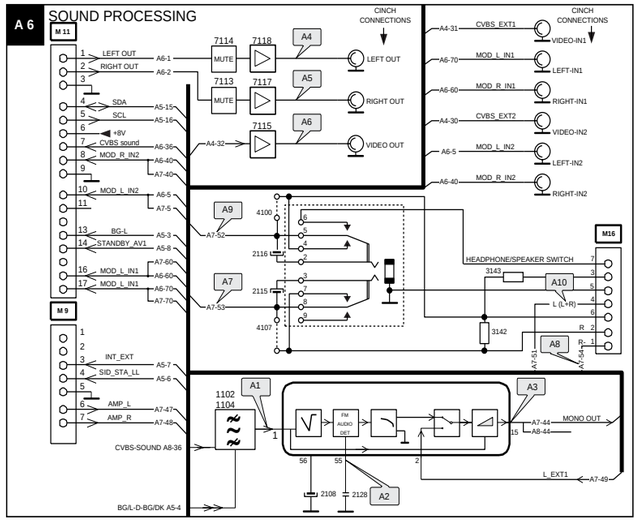

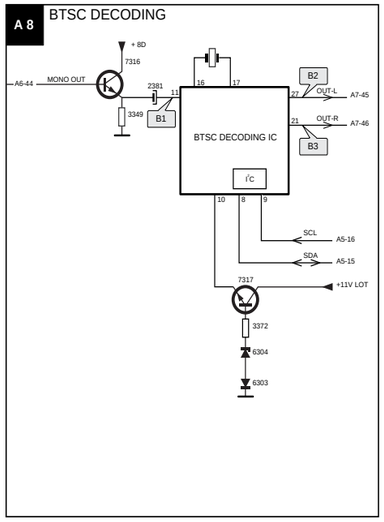

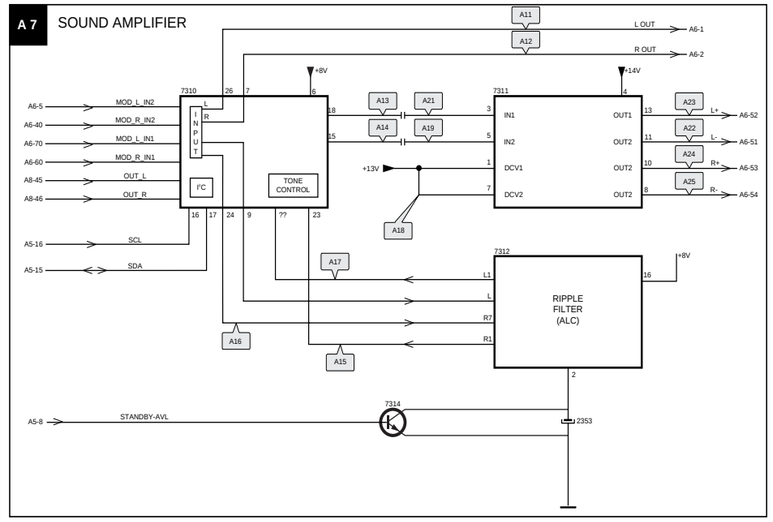

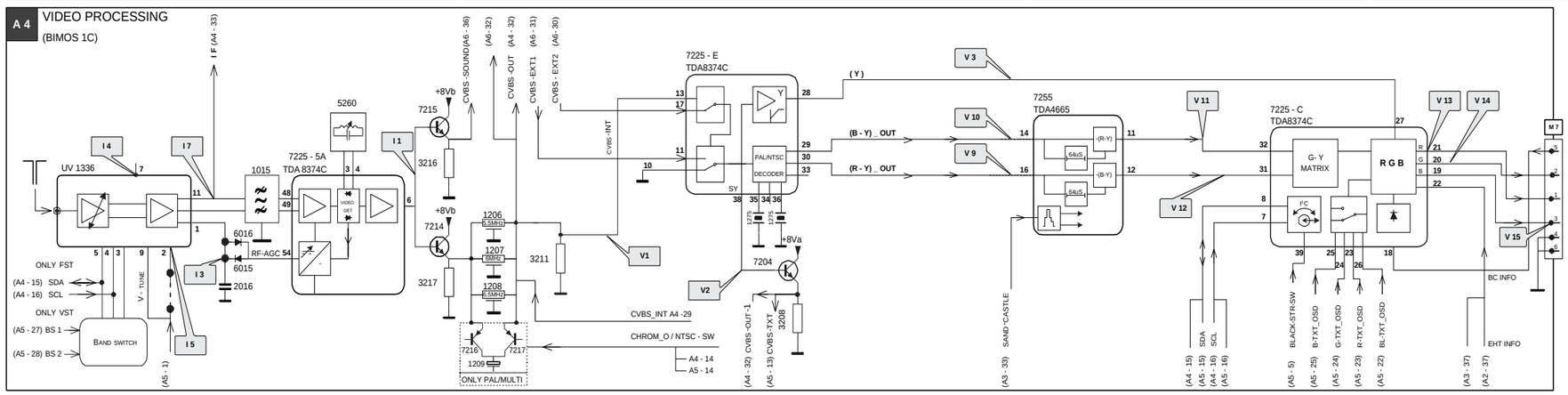

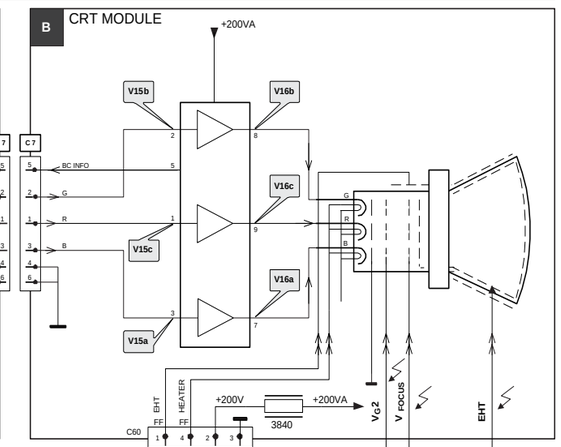

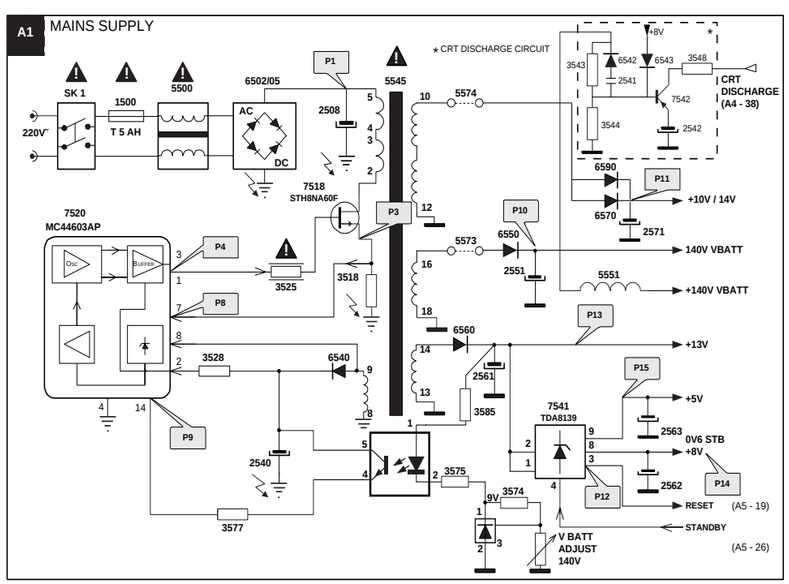

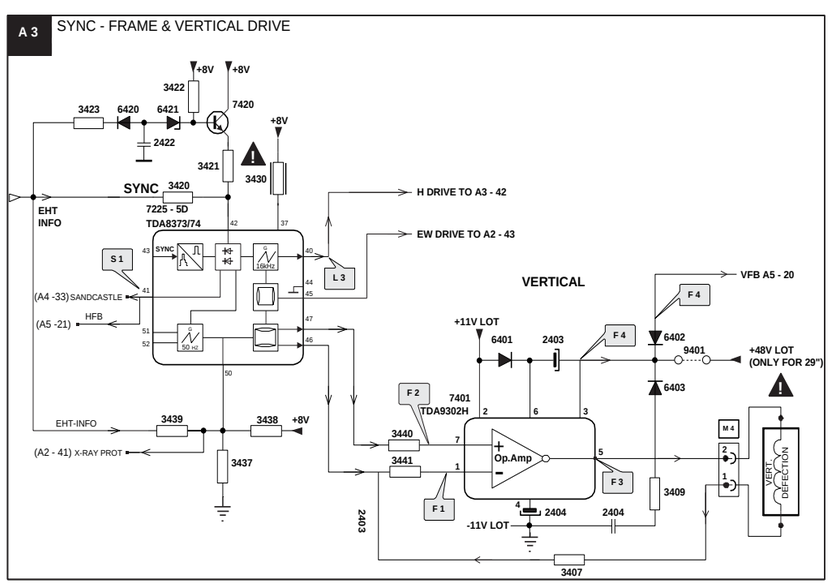

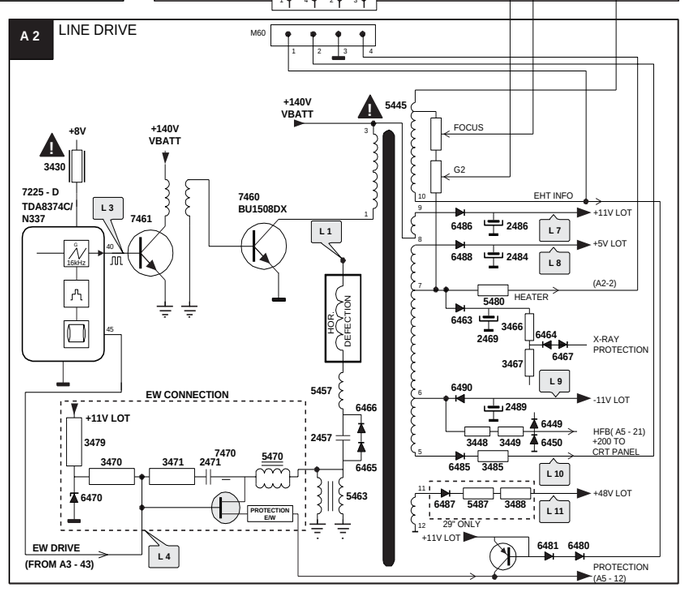

8.6532010_006.eps
110398

6 Block diagram

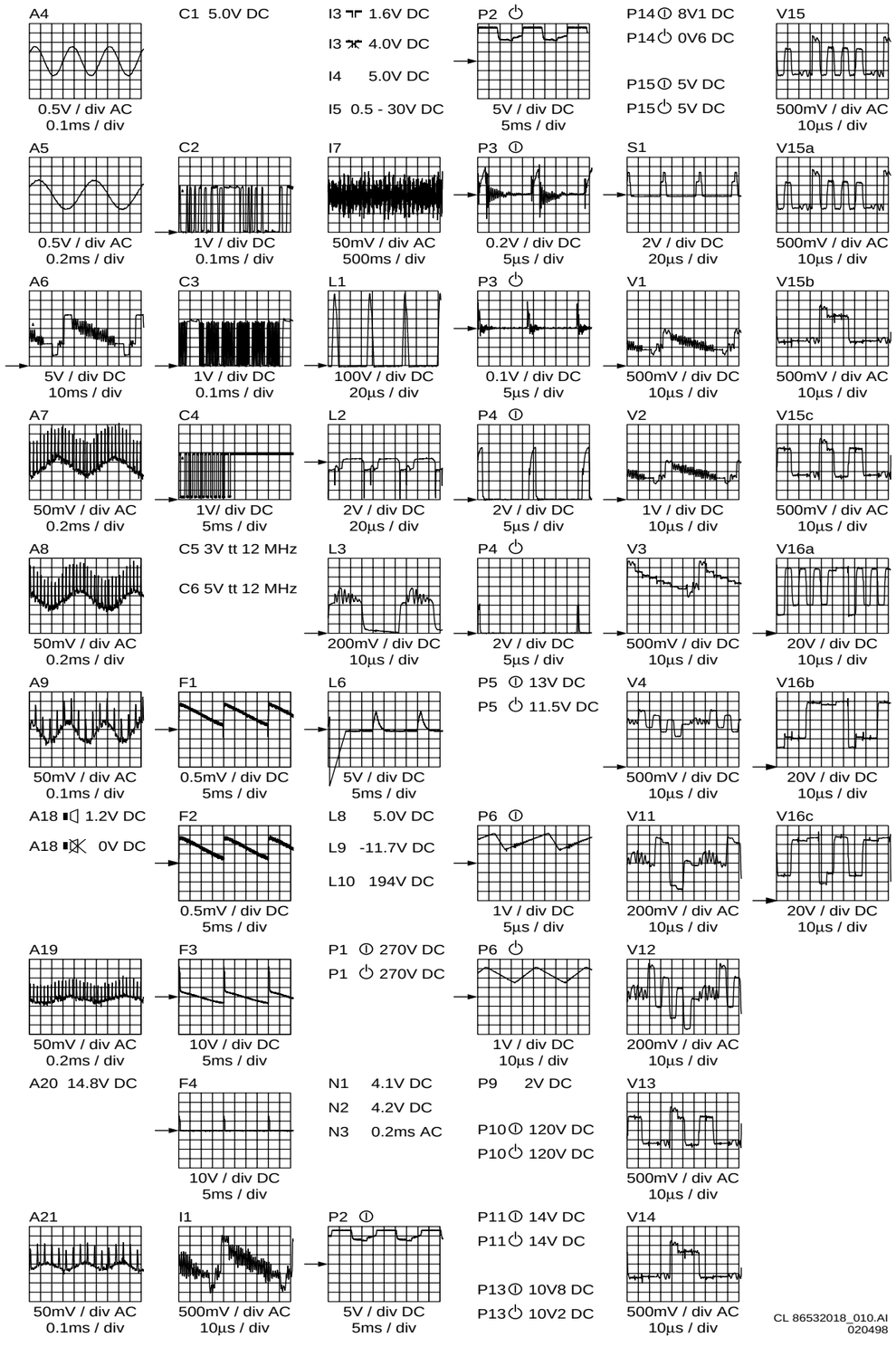

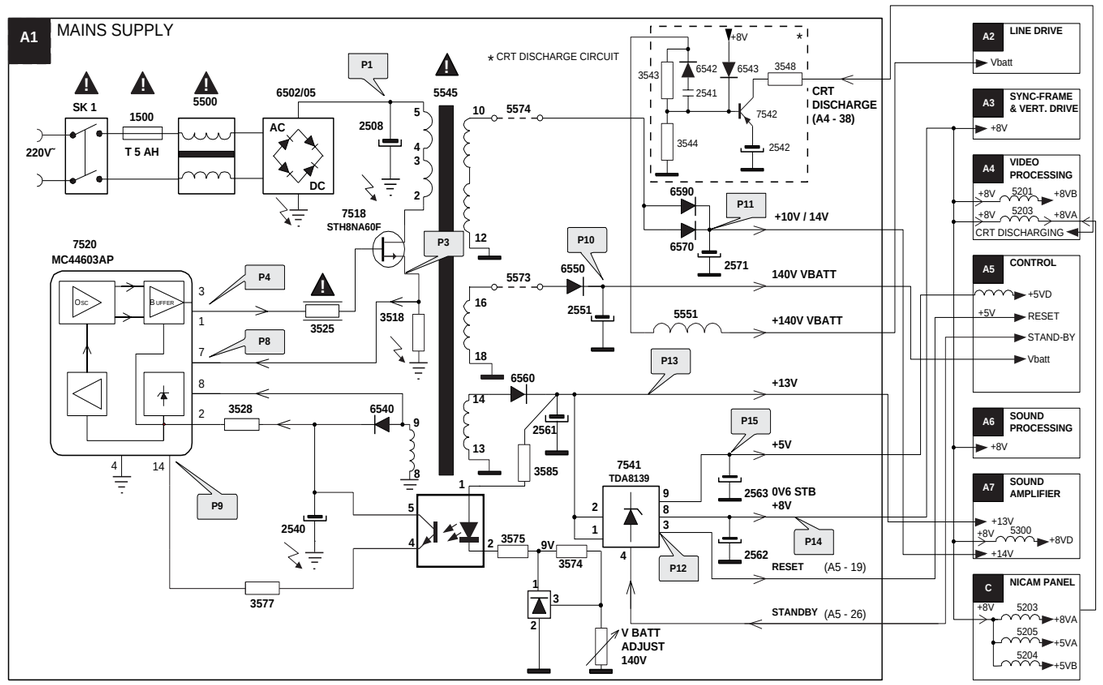

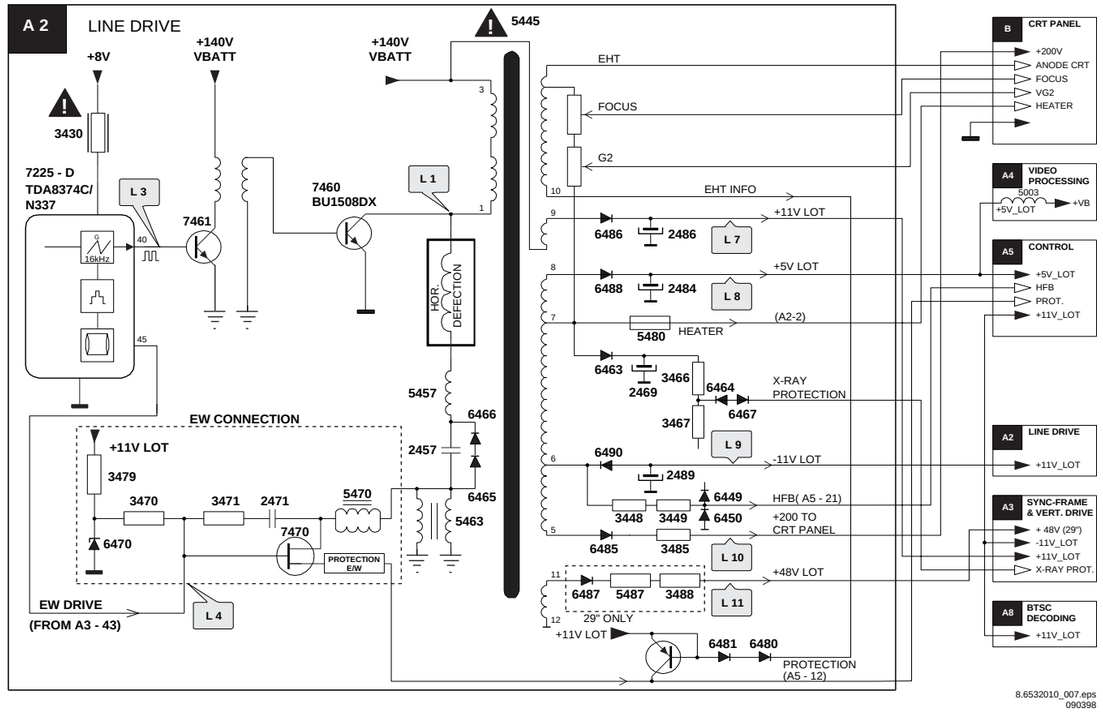

6 Block diagram

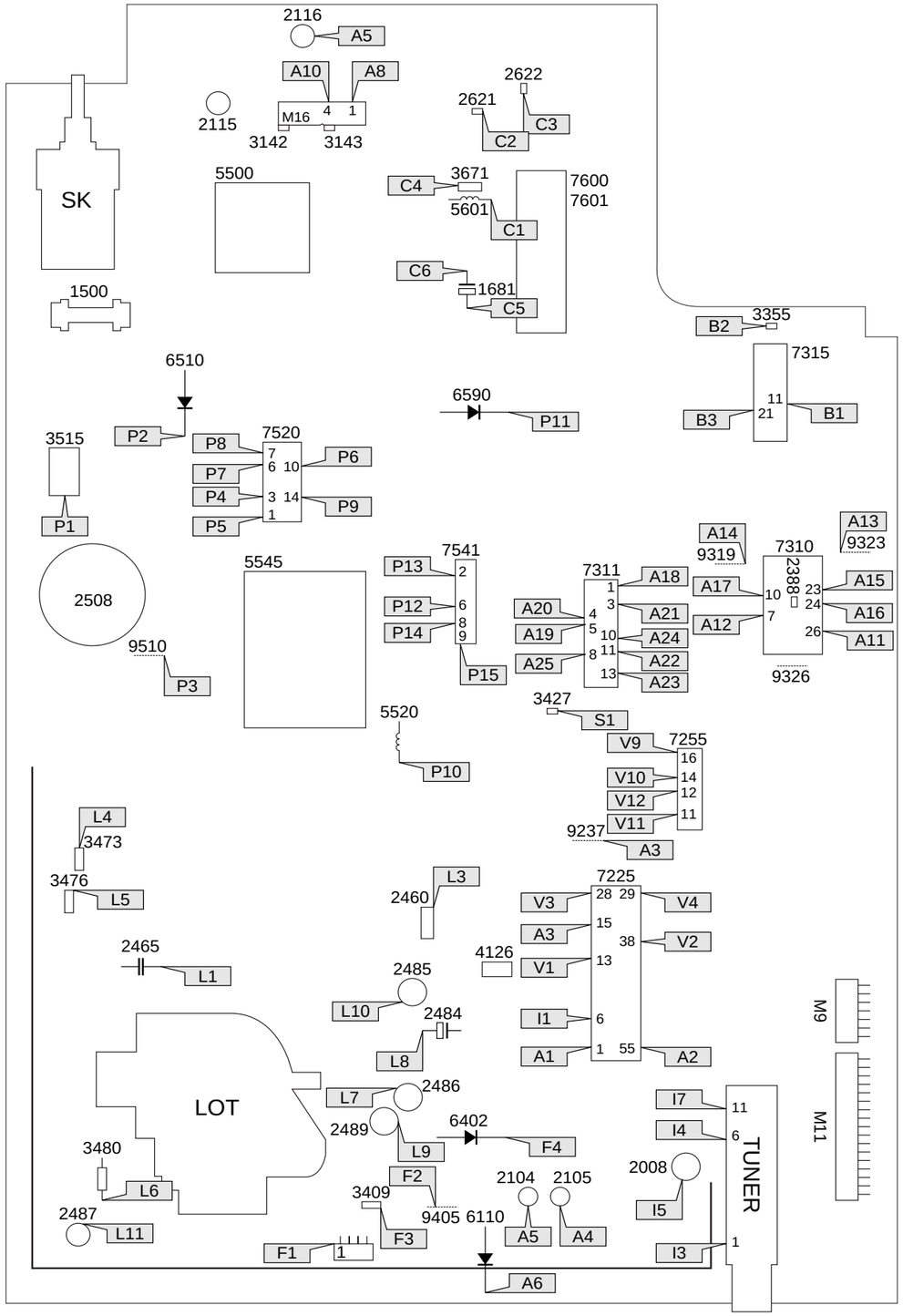

CL 86532018_001.AI
010498

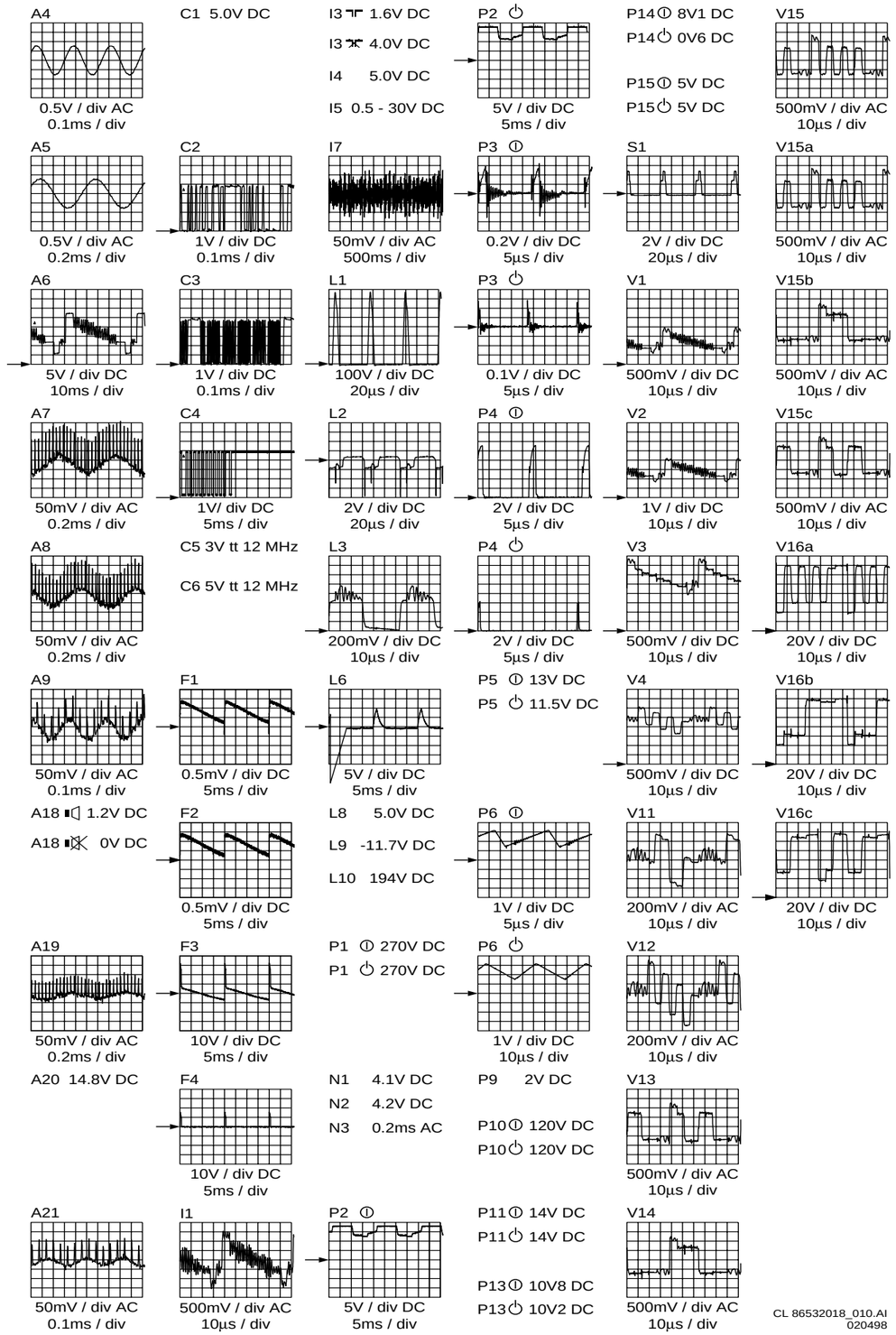

CL 86532018_010.AI
020498

7 Diagrams and print lay-outs

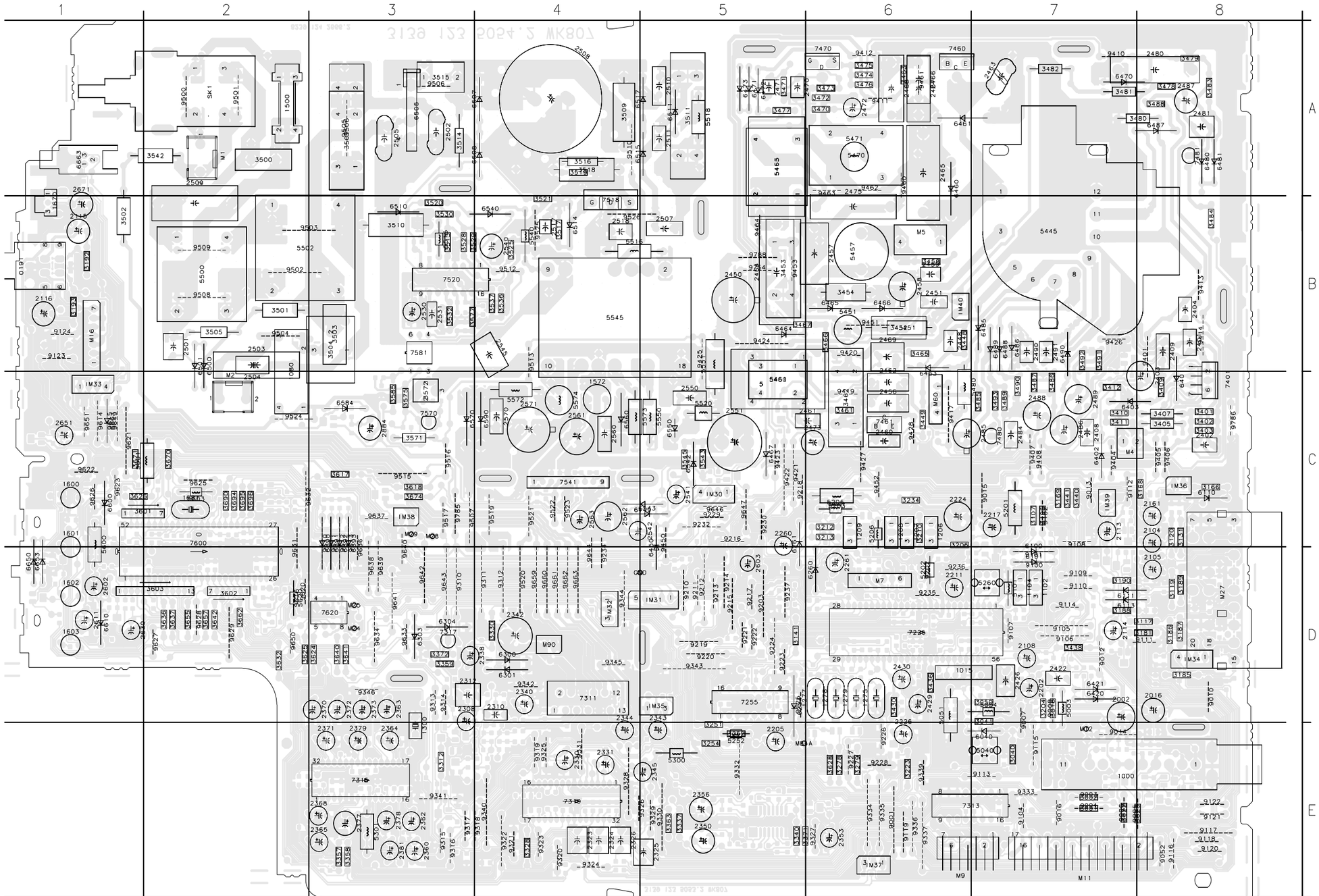

7 Diagrams and print lay-outs

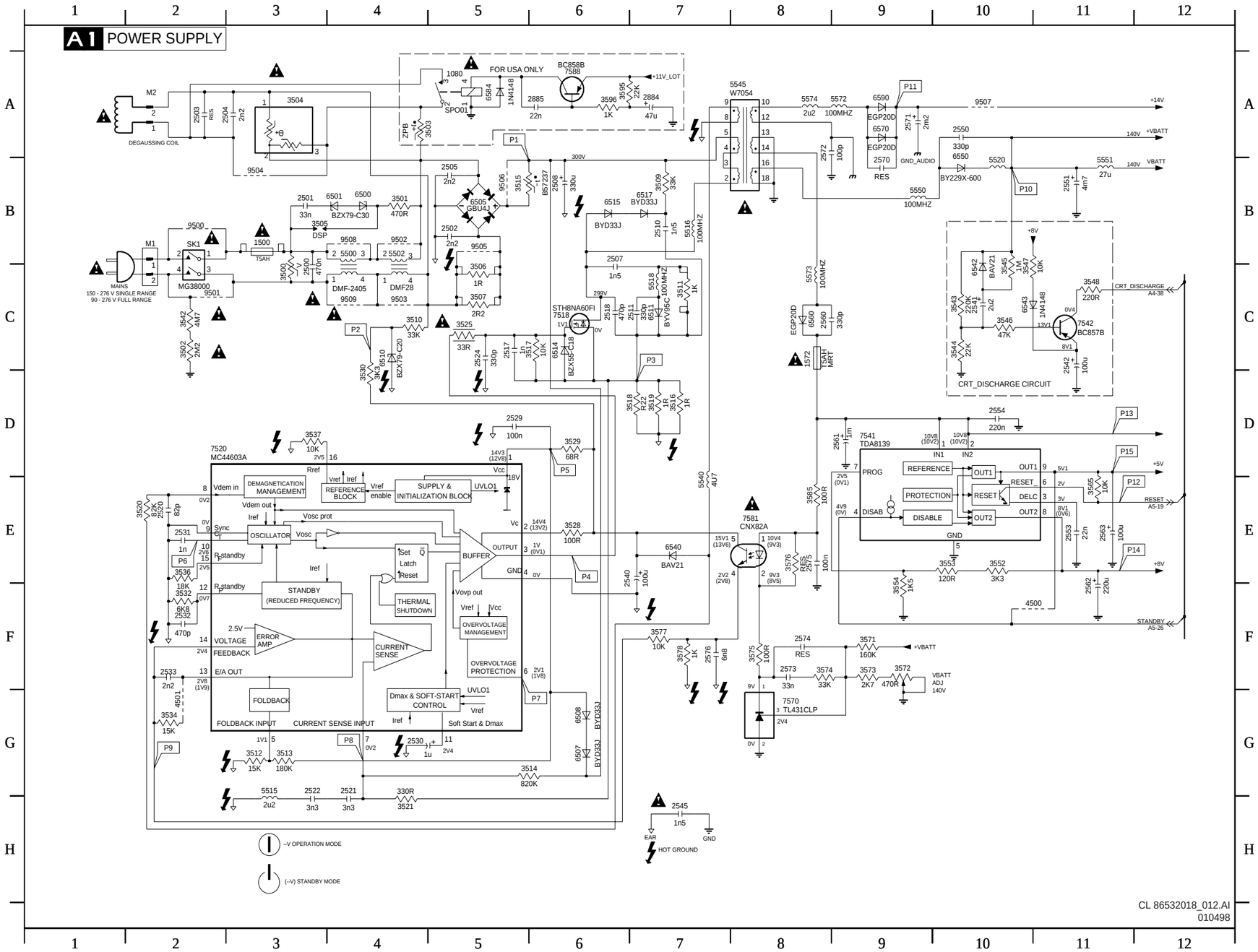

M1 B2	5500 B4
M2 A2	5502 B4
SK1 B2	5515 G3
1080 A5	5516 B7
1500 B3	5518 C7
1572 C8	5520 B10
2500 C3	5540 E7
2501 B3	5545 A7
2502 B5	5550 B9
2503 A2	5551 B11
2504 A3	5572 A9
2505 B5	5573 C8
2507 B6	5574 A8
2508 B6	6500 B4
2510 B7	6501 B4
2511 C7	6505 B5
2517 C5	6507 G6
2518 C6	6508 G6
2520 E2	6510 C4
2521 G4	6511 C7
2522 G3	6514 C6
2524 C5	6515 B6
2529 D5	6517 B7
2530 G4	6540 E7
2531 E2	6542 C10
2532 F2	6543 C10
2533 F2	6550 B10
2540 E6	6560 C8
2541 C10	6570 A9
2542 C11	6584 A5
2545 H7	6590 A9
2550 A10	7518 C6
2551 B11	7520 D2
2553 E11	7541 D9
2554 D10	7542 C11
2560 C8	7570 G8
2561 D9	7581 E8
2562 F11	7588 A6
2563 E11	9500 B2
2570 B9	9501 C2
2571 A9	9502 B4
2572 A8	9503 C4
2573 F8	9504 B3
2574 F8	9505 B5
2575 E8	9506 B5
2576 F7	9507 A10
2884 A7	9508 B4
2885 A6	9509 C4
3500 C3	
3501 B4	
3502 C2	
3503 A4	
3504 A3	
3505 B3	
3506 C5	
3507 C5	
3509 B7	
3510 C4	
3511 C7	
3512 G3	
3513 G3	
3514 G6	
3515 B5	
3516 D7	
3517 C6	
3518 D7	
3519 D7	
3520 E2	
3521 H4	
3525 C5	
3528 E6	
3529 D6	
3530 D4	
3532 F2	
3534 G2	
3536 E2	
3537 D3	
3542 C2	
3543 C10	
3544 C10	
3545 C10	
3546 C10	
3547 C10	
3548 C11	
3552 E10	
3553 E10	
3554 F9	
3565 E11	
3571 F9	
3572 F9	
3573 F9	
3574 F8	
3575 F8	
3576 E8	
3577 F7	
3578 F7	
3585 E8	
3595 A6	
3596 A6	
4500 F11	
4501 G2	

P1 ⏀ 270V DC
P1 ⏻ 270V DC

P5 ⏀ 13V DC
P5 ⏻ 11.5V DC

P2 ⏀

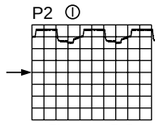

5V / div DC
5ms / div

P6 ⏀

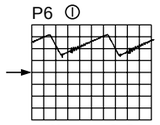

1V / div DC
5µs / div

P2 ⏻

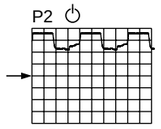

5V / div DC
5ms / div

P6 ⏻

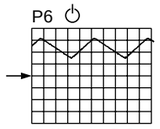

1V / div DC
10µs / div

P3 ⏀

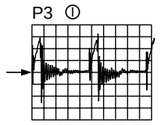

0.2V / div DC
5µs / div

P9 2V DC

P10 ⏀ 120V DC
P10 ⏻ 120V DC

P11 ⏀ 14V DC
P11 ⏻ 14V DC

P3 ⏻

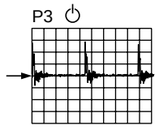

0.1V / div DC
5µs / div

P13 ⏀ 10V8 DC
P13 ⏻ 10V2 DC

P14 ⏀ 8V1 DC
P14 ⏻ 0V6 DC

P4 ⏀

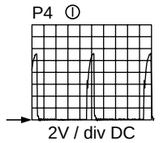

2V / div DC
5µs / div

P15 ⏀ 5V DC
P15 ⏻ 5V DC

P4 ⏻

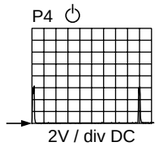

2V / div DC
5µs / div

CL 86532018_002.AI
270398

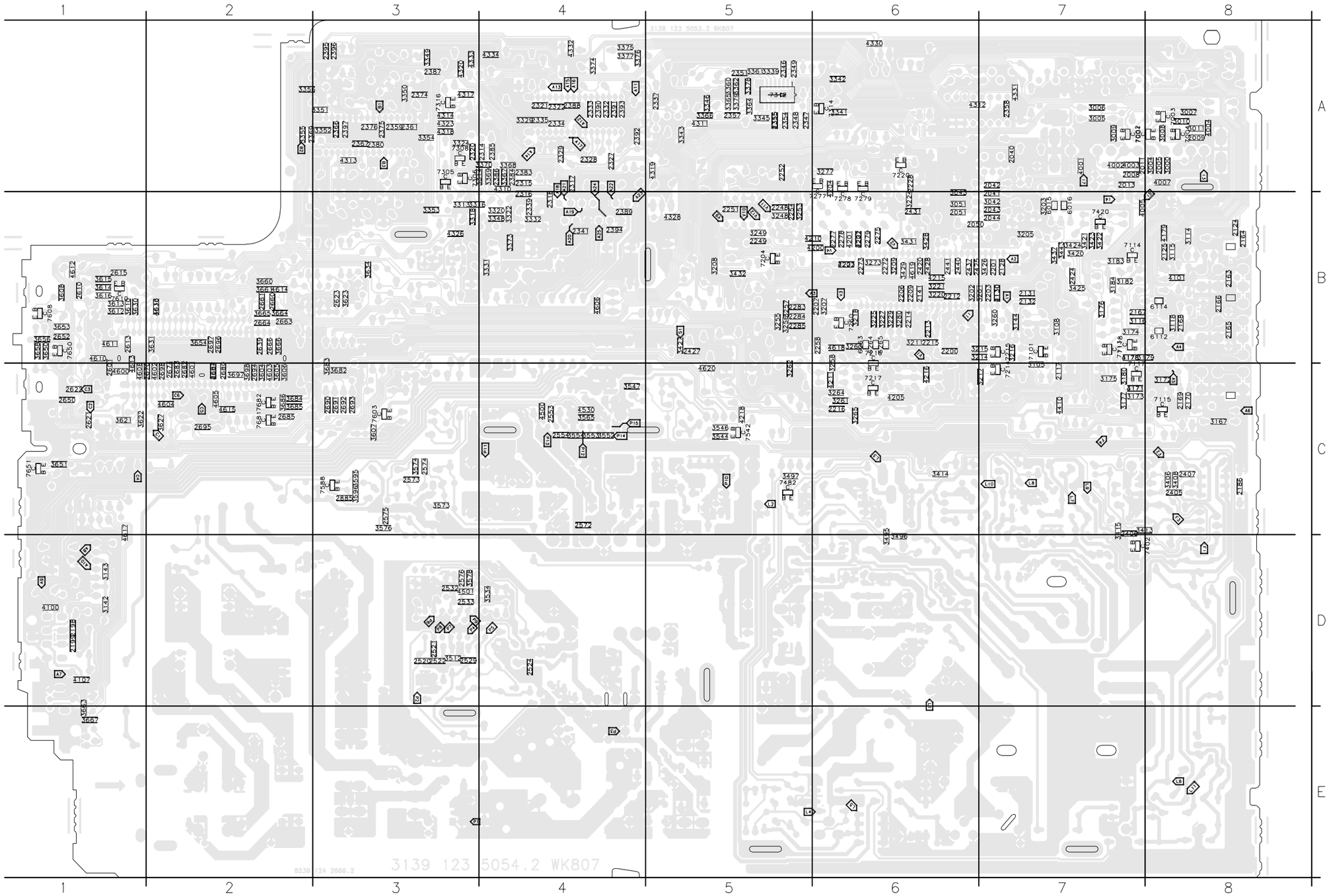
1
2
3
4
5
6
7
8
A
B
C
D
E
3139 123 5054.2 WK807

A2 LINE-DRIVE

DIVERSITY TABLE FOR ALL ITEM NO. MARKED WITH *

ITEM	PHILIPS TUBE 25"(W E/W)	PHILIPS TUBE 29" W/O E/W	PHILIPS TUBE 29" W E/W
2457	390n	390n	360n
2463	1n	560p	820p
2464	---	---	2u2
2465	8n2	9n1	9n1
2466	10n	---	---
2467	---	---	22n
2468	18n	---	33n
2470	470p	---	470p
2471	470n	---	---
2472	2u2	---	2u2
2473	47u	---	47u
2475	560n	---	---
2487	---	220u	220u
3453	---	4R7	---
3470	33K	---	220K
3471	220K	---	---
3472	100K	---	82K
3473	1K	---	1K
3474	10R	---	4R7
3475	10R	---	4R7
3477	100R	---	100R
3479	330R	---	330R
3481	82K	43K	43K
3488	---	4R7	4R7
5445	312813820571	312813820601	312813820581
5451	33uH	27uH	27uH
5457	822800129531	312813851703	312813851703
5463	---	---	312813834021
5465	312813834011	---	---
5470	311233830531	---	---
5471	---	---	1mH
5480	39uH	47uH	47uH
6461	BYW95C/20	---	BYW95C/20
6470	BZX79-C9V1	---	BZX79-C9V1
6472	1N4148	---	1N4148
6487	---	BYD33D	BYD33D
7470	MTP3055	---	MTP3055
9453	YES	---	YES
9460	---	YES	YES
9461	---	YES	---
9462	YES	---	---
9463	---	---	YES
9464	YES	---	---

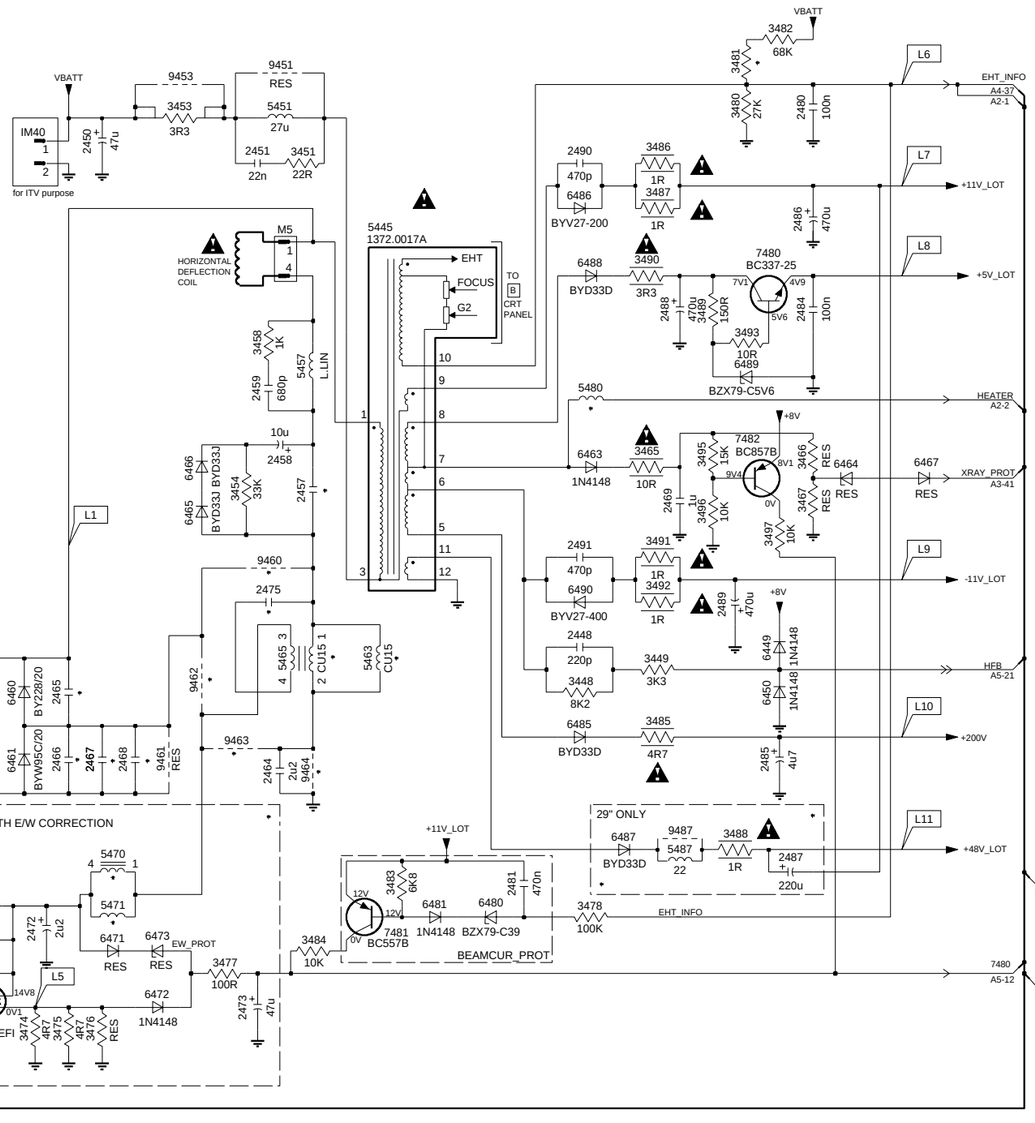

CL 86532018_013.AI
010498

M5 B5
M60 G11
2448 E7
2450 B4
2451 B5
2456 F1
2457 D6
2458 D6
2459 C5
2460 G1
2461 F1
2462 F1
2463 F4
2464 F5
2465 E4
2466 F4
2467 F4
2468 F5
2469 D8
2470 G3
2471 G4
2472 G4
2473 G5
2475 E5
2480 B9
2481 G7
2484 C9
2485 F9
2486 B9
2487 F9
2488 C8
2489 E8
2490 B7
2491 D7
3448 E7
3449 E8
3451 B6
3453 B5
3454 D5
3458 C5
3461 F1
3462 E2
3463 F3
3465 D8
3466 D9
3467 D9
3470 G3
3471 G3
3472 G3
3473 G3
3474 H4
3475 H4
3476 H4
3477 G5
3478 G7
3479 G3
3480 B8
3481 A8
3482 A9
3483 G6
3484 G6
3485 F8
3486 B8
3487 B8
3488 F8
3489 C8
3490 C8
3491 D8
3492 E8
3493 C9
3495 D8
3496 D8
3497 D9
5445 B6
5451 B6
5457 C6
5460 F2
5461 F2
5463 E6
5465 E6
5470 F4
5471 G4
5480 C8
5487 F8
6449 E9
6450 E9
6460 E4
6461 F4
6463 D7
6464 D9
6465 D5
6466 D5
6467 D10
6470 G3
6471 G4
6472 G5
6473 G5
6480 G7
6481 G6
6485 F7
6486 B7
6487 F8
6488 C7
6489 C9
6490 E7
7460 G3
7461 G2
7470 G3
7480 C9
7481 G6
7482 D8
9451 A6
9453 B5
9460 E5
9461 F5
9462 E5
9463 F5
9464 F6
9487 F8
IM40 B4

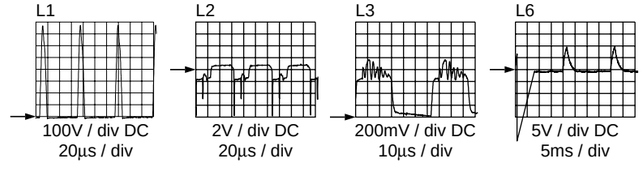

L8 5.0V DC

L9 -11.7V DC

CL 86532018_003.AI

A3 SYNC/FRAME/VERTICAL DRIVE

SYNC

FRAME/VERTICAL

ITEM	25"	29"
2403	100u	---
3405	2k2	1k8
3407	2k2	1k8
6402	BZX79-C18	BZX79-C39
7401	TDA9302H	STV9379F

F1 0.5mV / div DC 5ms / div

F2 0.5mV / div DC 5ms / div

F3 10V / div DC 5ms / div

F4 10V / div DC 5ms / div

S1 2V / div DC 20µs / div

CL 86532018_004.AI 270398

CL 86532018_014.AI 010498

M4 F11
2401 E8
2402 F9
2403 E9
2404 E10
2404 F9
2405 F7
2407 F7
2408 G10
2420 C6
2422 B5
2425 D5
2426 D5
2427 C4
2428 C5
2429 C4
2430 B6
2431 B7
2437 E5
2440 E6
2441 E6
2442 D4
3401 G10
3402 G10
3403 G10
3405 F7
3406 E7
3407 F7
3408 F7
3409 F10
3410 F10
3411 G10
3412 F10
3420 B5
3421 B6
3422 B5
3423 B4
3426 D5
3427 C4
3428 C5
3429 C5
3430 B6
3431 C7
3436 C7
3437 E5
3438 D5
3439 E5
3440 E6
3441 F6
3442 D5
3443 E5
6401 E9
6402 D9
6403 E10
6420 B5
6421 B5
7225-D C5
7401 E8
7420 B6
9401 E9

A4 VIDEO PROCESSING (BIMOS-IC)
PAL/NTSC/SECAM PROCESSING

Ref Des	AP_USA_LATAM	EUROPE
3255	212010891663 1K	NOT USED
3256	212010891663 1K	NOT USED
3257	212010891663 1K	NOT USED

Ref Des	CINCH	OTHER_VERSIONS
3218	212010891663 1K	NOT USED

TUNER/ SAW/ BANDSWITCH

FOR TRINORMA ONLY

FOR VST tuner only Bandswitch

FOR PAL/MULTI ONLY 34.4MHZ TRAP

FOR PAL/MULTI ONLY

for bandpass filter

for ITV purpose

CL 86532018_015.AI
010498

M7	D9	3223	E5
1000	F3	3224	E5
1015	G7	3225	D8
1206	D10	3227	D7
1207	D10	3229	D8
1208	E10	3234	F9
1209	F11	3248	A7
1275	C3	3249	B7
1277	C3	3251	A8
1278	D3	3252	C7
1279	D3	3253	B7
2002	F2	3254	B7
2005	F2	3255	F5
2008	F2	3256	F5
2009	H4	3257	F5
2011	G2	3260	F8
2013	F2	3261	E8
2016	H4	3262	F8
2040	F5	3263	E7
2041	G5	3264	E8
2042	G5	3265	E8
2043	H5	3273	C4
2044	G6	3277	C2
2050	G6	3278	D2
2051	H7	3279	D2
2200	B2	3280	E7
2201	H7	4001	F4
2202	H8	4002	G4
2203	H9	4003	F2
2205	C7	4004	G4
2206	B2	4200	C4
2207	B5	4201	C4
2209	B4	4202	D5
2211	C3	4203	D5
2212	C3	4204	C2
2213	B2	4205	D11
2214	B2	5003	E2
2215	F9	5040	G6
2216	E11	5051	H6
2217	G10	5054	G6
2221	D5	5201	G10
2222	D5	5202	F9
2224	F9	5203	E9
2226	E5	5205	E11
2228	E5	5206	D11
2248	A7	5252	C7
2249	B7	5260	E8
2251	C7	6015	G4
2252	C7	6016	G4
2254	C7	6040	G5
2260	F8	6254	C7
2261	E7	6260	E8
2272	C4	6261	E8
2273	C4	6263	D8
2275	C3	6264	D8
2277	C3	6265	D8
2278	D3	7001	H3
2279	D3	7002	H3
2283	E6	7003	G3
2284	E6	7004	H3
2285	E6	7204	A4
3000	H3	7214	G10
3001	G2	7215	H11
3002	H2	7216	F10
3004	H2	7220	E5
3005	H2	7225-A	F8
3006	H2	7225-C	C5
3007	H3	7225-E	B3
3008	H2	7255	A8
3009	G2	7260	D8
3010	H3	7277	C2
3011	H4	7278	D2
3016	H4	7279	D2
3020	F2	9003	H2
3022	F2	9004	G2
3040	F5	9005	G2
3041	G6	9006	F2
3042	H5	9007	G6
3043	H6	9008	H4
3050	G6	9202	F9
3051	H6	9203	A5
3201	H9	IM31	G11
3202	H9	IM39	H12
3203	H7		
3204	H7		
3205	H7		
3206	F10		
3207	B5		
3208	A4		
3209	A4		
3210	E11		
3211	E11		
3212	F11		
3213	F11		
3214	G9		
3215	G10		
3216	H11		
3217	F10		
3218	F6		
3220	D4		
3221	D4		

I1
500mV / div AC
10µs / div

I3 1.6V DC

I3 4.0V DC

I4 5.0V DC

I5 0.5 - 30V DC

I7
50mV / div AC
500ms / div

V1
500mV / div DC
10µs / div

V2
1V / div DC
10µs / div

V3
500mV / div DC
10µs / div

V4
500mV / div DC
10µs / div

V11
200mV / div AC
10µs / div

V12
200mV / div AC
10µs / div

V13
500mV / div AC
10µs / div

V14
500mV / div AC
10µs / div

V15
500mV / div AC
10µs / div

CL 86532018_005.AI
270398

A5 CONTROL

* Ref Des	VST Tuning	PLL Tuning
3614	15K	jumper
3615	10K	jumper
3616	22K	jumper

* Ref Des	TDA 8844	TDA 837X
3665	2K2	---
3664	2K2	---

* Ref Des	TXT	Non-TXT/CC
3694	1K8	5K6
3695	1K8	5K6
3696	1K8	5K6
3697	820R	---
3698	1K	---

7600 - 52 PIN WITH TELETEXT
7601 - 48 PIN WITHOUT TELETEXT

CL 86532018_016.AI
010498

GND H2	3641 D3
M24 A10	3642 D3
M25 A10	3650 G2
M28 G5	3651 E1
M29 G5	3653 G3
1600 E2	3654 D4
1601 E2	3655 D4
1602 E3	3656 G2
1603 E3	3657 E4
1670 D11	3658 F2
1681 D8	3660 E4
2601 A8	3661 E4
2602 A9	3662 F4
2603 B10	3663 F4
2610 A2	3664 G5
2611 A3	3665 H5
2613 A4	3666 G6
2615 A2	3667 G4
2621 B10	3670 D10
2622 C10	3671 C10
2623 A12	3674 D10
2630 B2	3681 D11
2639 G6	3682 E11
2650 G1	3683 E11
2651 F1	3684 E9
2652 E3	3685 E10
2660 E3	3686 E10
2661 E4	3690 E8
2663 G5	3694 F8
2664 G5	3695 F8
2666 G6	3696 F8
2670 D9	3697 G9
2671 D11	3698 G8
2674 D9	4600 A7
2680 E9	4601 D9
2682 D8	4602 D7
2683 D8	4603 G8
2684 D9	4604 C8
2685 E11	4605 D9
2690 E8	4607 D9
2691 E8	4608 D8
2692 F8	4616 B3
2693 F8	4617 D10
2694 G8	5600 A8
2695 G10	5601 A9
2696 D6	5603 G9
2697 E4	5620 A10
2698 D7	6600 A8
3601-A B8	6610 A3
3601-B B8	6650 F2
3601-C B8	6653 F2
3601-D C8	6661 G4
3601-E C8	6663 G3
3601-F C8	6690 E9
3602-A F5	6691 F9
3602-B F5	6692 F9
3602-C F5	6693 F9
3602-D E5	7600 B6
3602-E E5	7603 D10
3602-F E5	7608 F3
3603-A A5	7610 A4
3603-B A5	7620 A11
3603-C B5	7650 F2
3603-D B5	7651 E2
3603-E B5	7681 E10
3603-F B5	7682 E10
3603-G C5	9610 E9
3603-H C5	9611 E9
3603-I C5	9612 F9
3603-J D5	9613 F9
3603-K D5	9614 F4
3603-L D5	9615 G4
3604 G8	9616 A10
3605 G8	IM30 G11
3606 G8	IM32 G2
3607 C10	IM33 C12
3608 F3	IM37 G11
3610 A4	IM38 C9
3612 A3	
3613 A3	
3614 A2	
3615 A2	
3616 A3	
3617 A2	
3618 A2	
3621 B9	
3622 B9	
3623 A11	
3624 A10	
3625 B10	
3626 B9	
3627 C9	
3628 C9	
3630 B3	
3631 B5	
3632 B3	
3633 B3	
3634 B3	
3636 C3	
3637 C3	
3640 D3	

C1 5.0V DC

C2

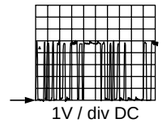

1V / div DC
0.1ms / div

C3

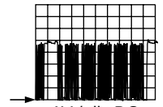

1V / div DC
0.1ms / div

C4

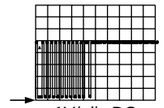

1V/ div DC
5ms / div

C5 3V tt 12 MHz

C6 5V tt 12 MHz

CL 86532018_006.AI
020498

A6 SOUND PROCESSING + SOUND INTERFACE

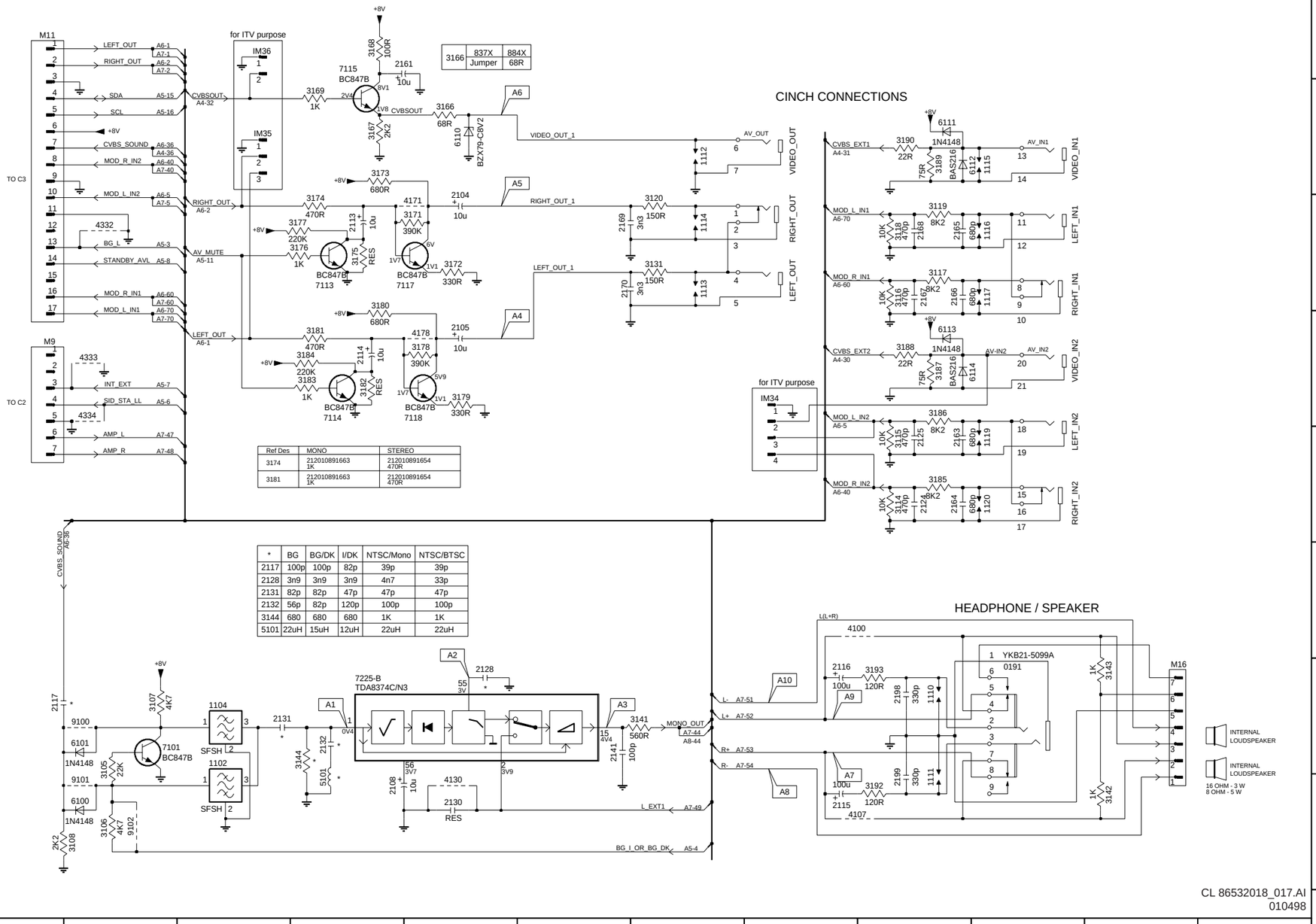

CL 86532018_017.AI
010498

M9 D1
M11 A1
M16 G11
0191 G10
1102 G3
1104 G3
1110 G9
1111 H9
1112 B7
1113 C7
1114 C7
1115 B10
1116 C10
1117 C10
1119 E10
1120 E10
2104 C5
2105 D5
2108 H4
2113 C4
2114 D4
2115 H8
2116 G8
2117 G1
2124 E9
2125 E9
2128 G5
2130 H5
2131 G3
2132 G4
2141 G6
2161 A4
2163 E9
2164 E9
2165 C9
2166 C9
2167 C9
2168 C9
2169 C6
2170 C6
2198 G9
2199 H9
3105 G2
3106 H2
3107 G2
3108 H2
3114 E9
3115 E9
3116 C9
3117 C9
3118 C9
3119 C9
3120 C7
3131 C7
3141 G7
3142 H11
3143 G11
3144 G4
3166 B5
3167 B4
3168 A4
3169 B4
3171 C5
3172 C5
3173 B4
3174 C4
3175 C4
3176 C4
3177 C4
3178 D5
3179 D5
3180 C4
3181 D4
3182 D4
3183 D4
3184 D4
3185 E9
3186 D9
3187 D9
3188 D9
3189 B9
3190 B9
3192 H9
3193 G9
4100 F8
4107 H8
4130 H5
4171 C5
4178 D5
4332 C2
4333 D2
4334 D2
5101 H4
6100 H2
6101 G2
6110 B5
6111 B9
6112 B9
6113 D9
6114 D9
7101 G2
7113 C4
7114 D4
7115 A4
7117 C4
7118 D5
7225-B G4
9100 G2
9101 H2
9102 H2
IM34 D8
IM35 B3
IM36 A3
M27-A C8
M27-B B8
M27-C C10
M27-D B10
M27-E E10
M27-F D10
M27-G C8
M27-H D10
M27-I E10

A4
0.5V / div AC
0.1ms / div

A5
0.5V / div AC
0.2ms / div

A6
5V / div DC
10ms / div

A7
50mV / div AC
0.2ms / div

A8
50mV / div AC
0.2ms / div

A9
50mV / div AC
0.1ms / div

CL 86532018_007.AI
020498

7 Diagrams and print lay-outs

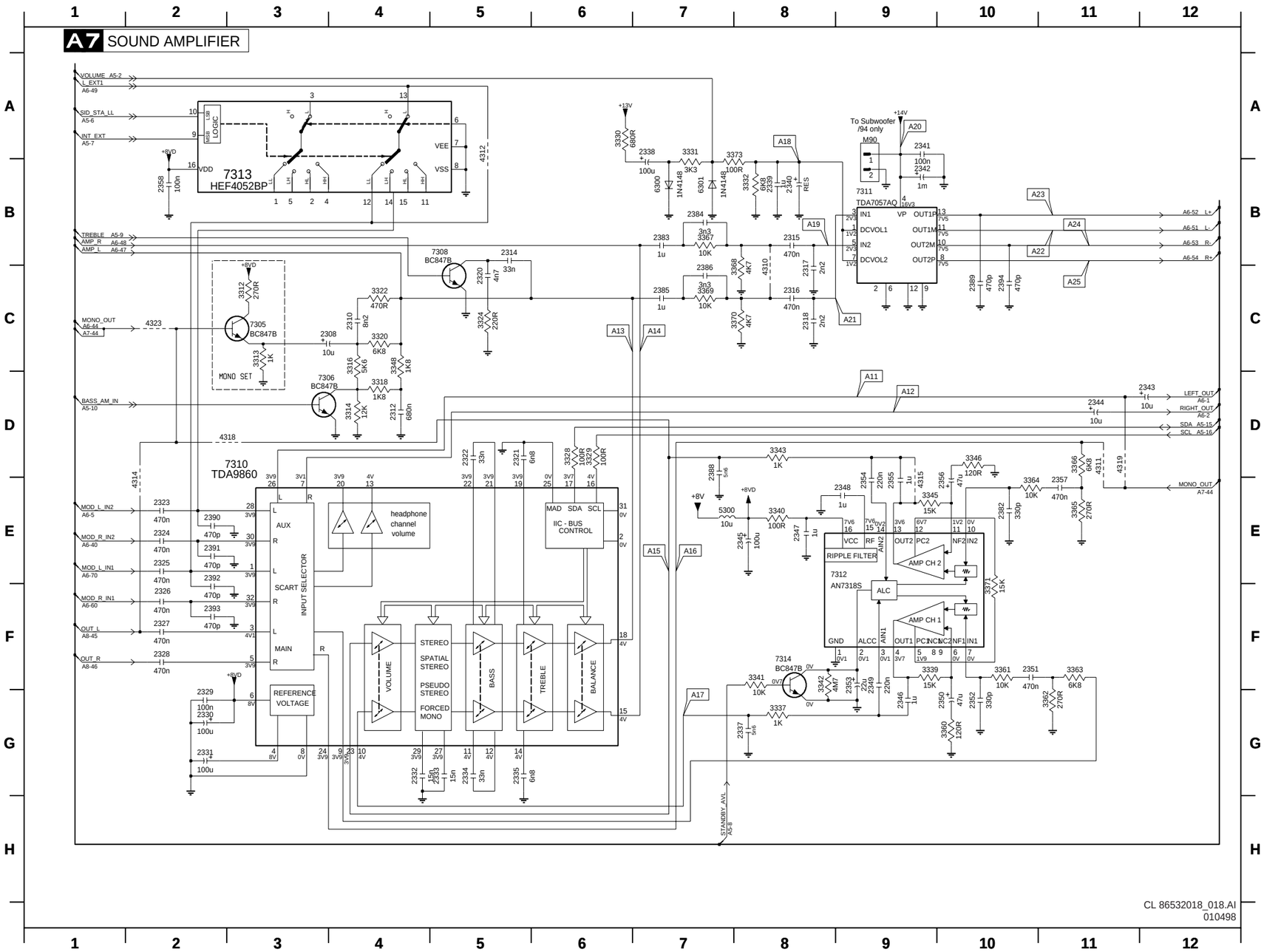

M90 A9
2308 C3
2310 C4
2312 D4
2314 B5
2315 B8
2316 C8
2317 C8
2318 C8
2320 C5
2321 D5
2322 D5
2323 E2
2324 E2
2325 E2
2326 F2
2327 F2
2328 F2
2329 G2
2330 G2
2331 G2
2332 G4
2333 G5
2334 G5
2335 G5
2337 G8
2338 A7
2339 B8
2340 B8
2341 A9
2342 B9
2343 D12
2344 D11
2345 E8
2346 G9
2347 E8
2348 E9
2349 F9
2350 G10
2351 F10
2352 G10
2353 F9
2354 E9
2355 E9
2356 E10
2357 E11
2358 B2
2382 E10
2383 B7
2384 B7
2385 C7
2386 C7
2388 D7
2389 C10
2390 E2
2391 E2
2392 E2
2393 F2
2394 C10
3312 C3
3313 C3
3314 D4
3316 C4
3318 D4
3320 C4
3322 C4
3324 C5
3328 D6
3329 D6
3330 A6
3331 A7
3332 B8
3337 C8
3339 F9
3340 E8
3341 F8
3342 F8
3343 D8
3345 E9
3346 D10
3348 C4
3360 G10
3361 F10
3362 G11
3363 F11
3364 E10
3365 E11
3366 D11
3367 B7
3368 C8
3369 C7
3370 C8
3371 F10
3373 A8
4310 C8
4311 D11
4312 A5
4314 E2
4315 E9
4318 D3
4319 D11
4323 C2
5300 E7
6300 B7
6301 B7
7305 C3
7306 D3
7308 B5
7310 D3
7311 B9
7312 E8
7313 B2
7314 F8

A18 1.2V DC

A18 0V DC

A19

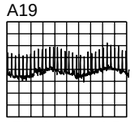

50mV / div AC
0.2ms / div

A20 14.8V DC

A21

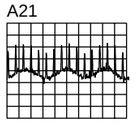

50mV / div AC
0.1ms / div

CL 86532018_008.AI
270398

A8 BTSC DECODING

BTSC

STEREO DECODER
INPUT LEVEL ADJUST
NOISE DETECTOR
STEREO/SAP SWITCH
DEMATRIX + MODE SELECT
DE-EMPHASIS
SAP DEMODULATOR
DBX
STEREO ADJUST
SUPPLY
LOGIC I2C TRANSC

7315 TDA9850
7316 BC848C
7317 BC337-25
6303 BZX79-C9V1
6304 1N4148

MONO_OUT A6-44
OUT_L A7-45
OUT_R A7-46
SCL A5-16
SDA A5-15
+11V_LOT

1300 C6
2359 C5
2360 B5
2361 C5
2362 C5
2363 C7
2364 C7
2365 E5
2366 E5
2367 E5
2368 E5
2369 E6
2370 E6
2371 E6
2372 E6
2373 E6
2374 E4
2374 C5
2375 D4
2376 E7
2377 E7
2378 E7
2379 E7
2380 D8
2381 D4
2387 E8
2395 E9
2396 E9
3349 D4
3350 C5
3351 E6
3352 E6
3353 D9
3354 D9
3355 C9
3356 D9
3357 E8
3358 D8
3359 F9
3372 F8
4313 D8
4317 C4
5301 E7
6303 F8
6304 G8
7315 D6
7316 C3
7317 E8

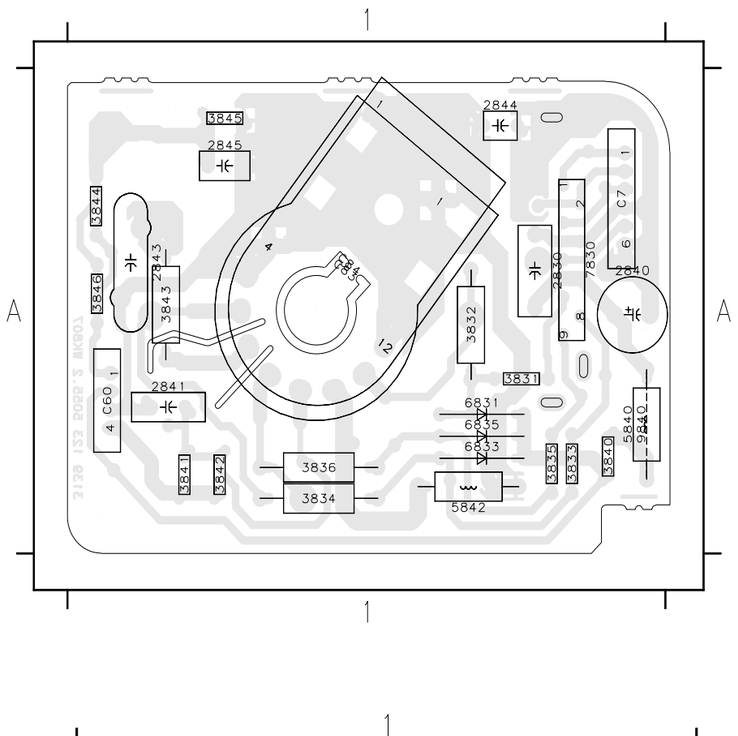

C7 A1
C60 A1
C83 A1
C84 A1
2830 A1
2840 A1
2841 A1
2843 A1
2844 A1
2845 A1
3831 A1
3832 A1
3833 A1
3834 A1
3835 A1
3836 A1
3840 A1
3841 A1
3842 A1
3843 A1
3844 A1
3845 A1
3846 A1
5840 A1
5842 A1
6831 A1
6833 A1
6835 A1
7830 A1
9840 A1

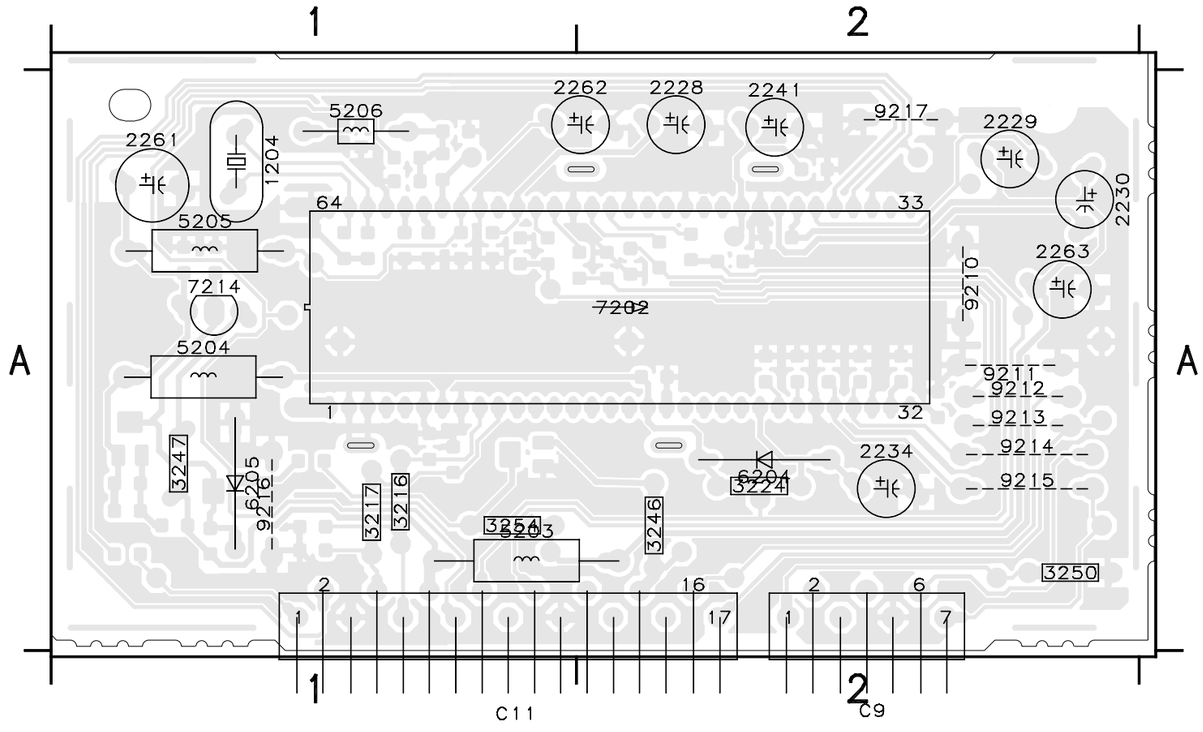

C9 A2
C11 A1
1204 A1
2228 A2
2229 A2
2230 A2
2234 A2
2241 A2
2261 A1
2262 A2
2263 A2
3216 A1
3217 A1
3224 A2
3246 A2
3247 A1
3250 A2
3254 A1
5203 A2
5204 A1
5205 A1
5206 A1
6204 A2
6205 A1
7202 A1
7214 A1
9210 A2
9211 A2
9212 A2
9213 A2
9214 A2
9215 A2
9216 A1
9217 A2

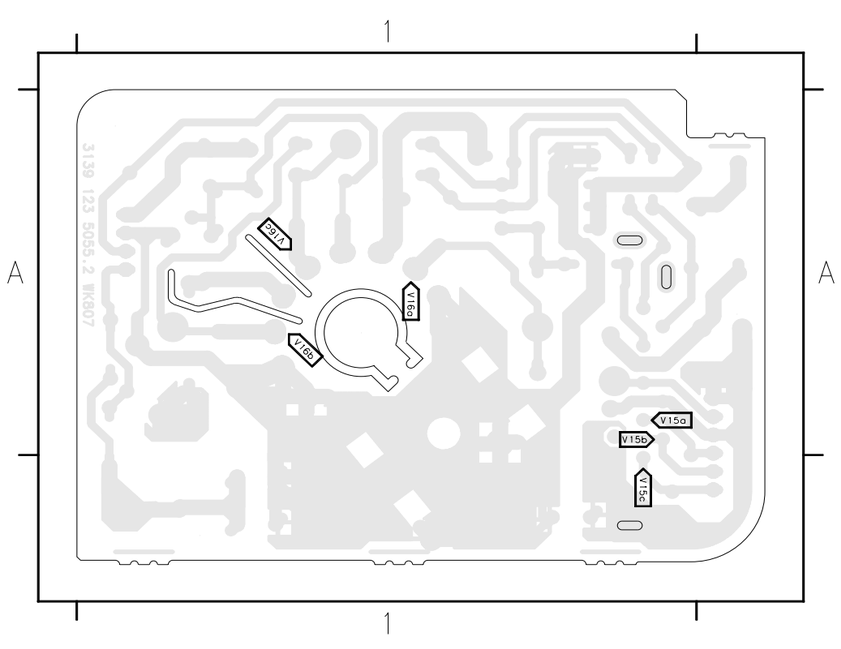

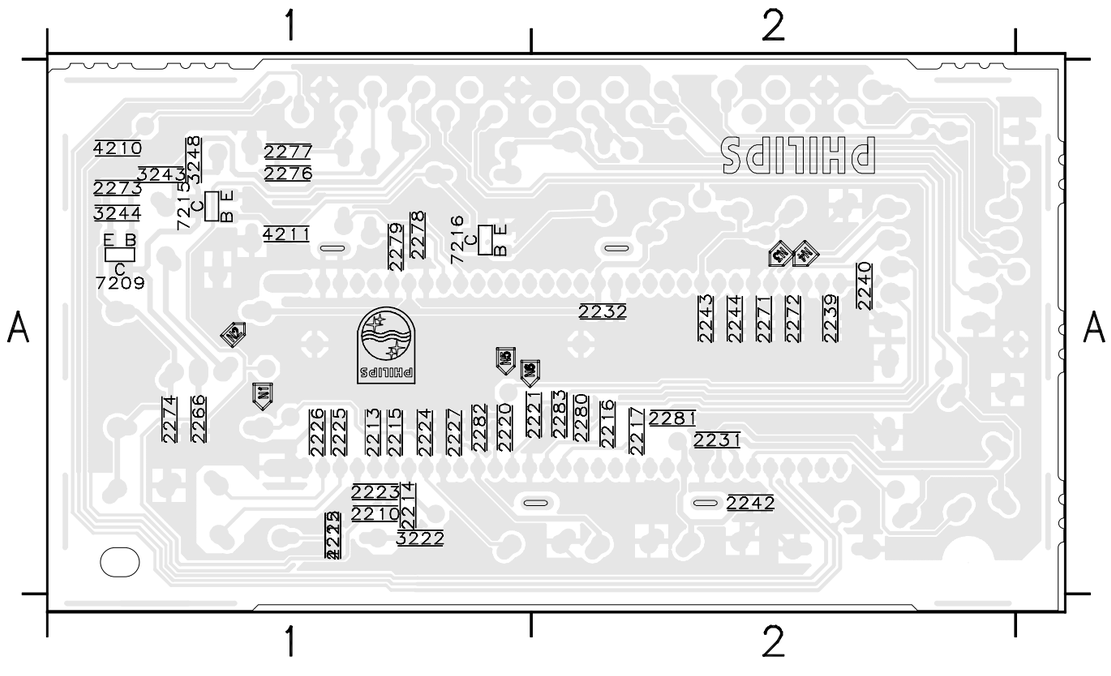

2210 A1
2213 A1
2214 A1
2215 A1
2216 A2
2217 A2
2220 A1
2221 A2
2222 A1
2223 A1
2224 A1
2225 A1
2226 A1
2227 A1
2231 A2
2232 A2
2239 A2
2240 A2
2242 A2
2243 A2
2244 A2
2266 A1
2271 A2
2272 A2
2273 A1
2274 A1
2276 A1
2277 A1
2278 A1
2279 A1
2280 A2
2281 A2
2282 A1
2283 A2
3222 A1
3243 A1
3244 A1
3248 A1
4210 A1
4211 A1
4215 A1
7209 A1
7215 A1
7216 A1

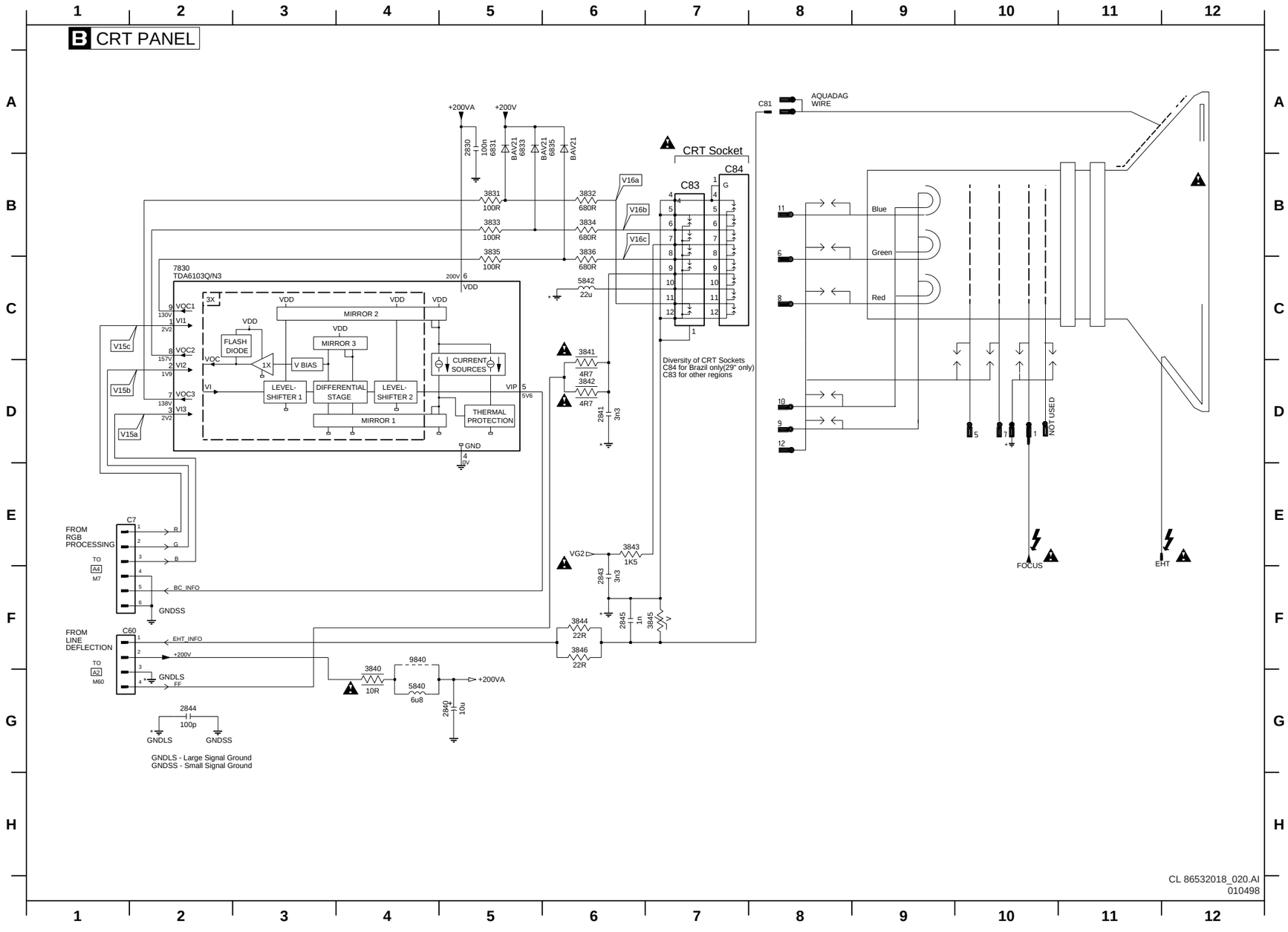

C7 E2
C60 F2
C81 A8
C83 B7
C84 B7
2830 A5
2840 G5
2841 D6
2843 F6
2844 G2
2845 F6
3831 B5
3832 B6
3833 B5
3834 B6
3835 B5
3836 B6
3840 G4
3841 C6
3842 D6
3843 E6
3844 F6
3845 F7
3846 F6
5840 G4
5842 C6
6831 A5
6833 A5
6835 A6
7830 C2
9840 F4

V15a
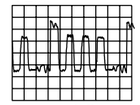
500mV / div AC
10µs / div

V15b
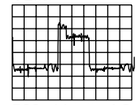
500mV / div AC
10µs / div

V15c
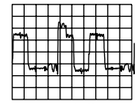
500mV / div AC
10µs / div

V16a
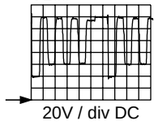
20V / div DC
10µs / div

V16b
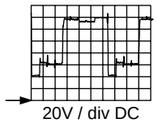
20V / div DC
10µs / div

V16c
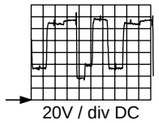
20V / div DC
10µs / div

CL 86532018_009.AI
270398

NICAM PANEL

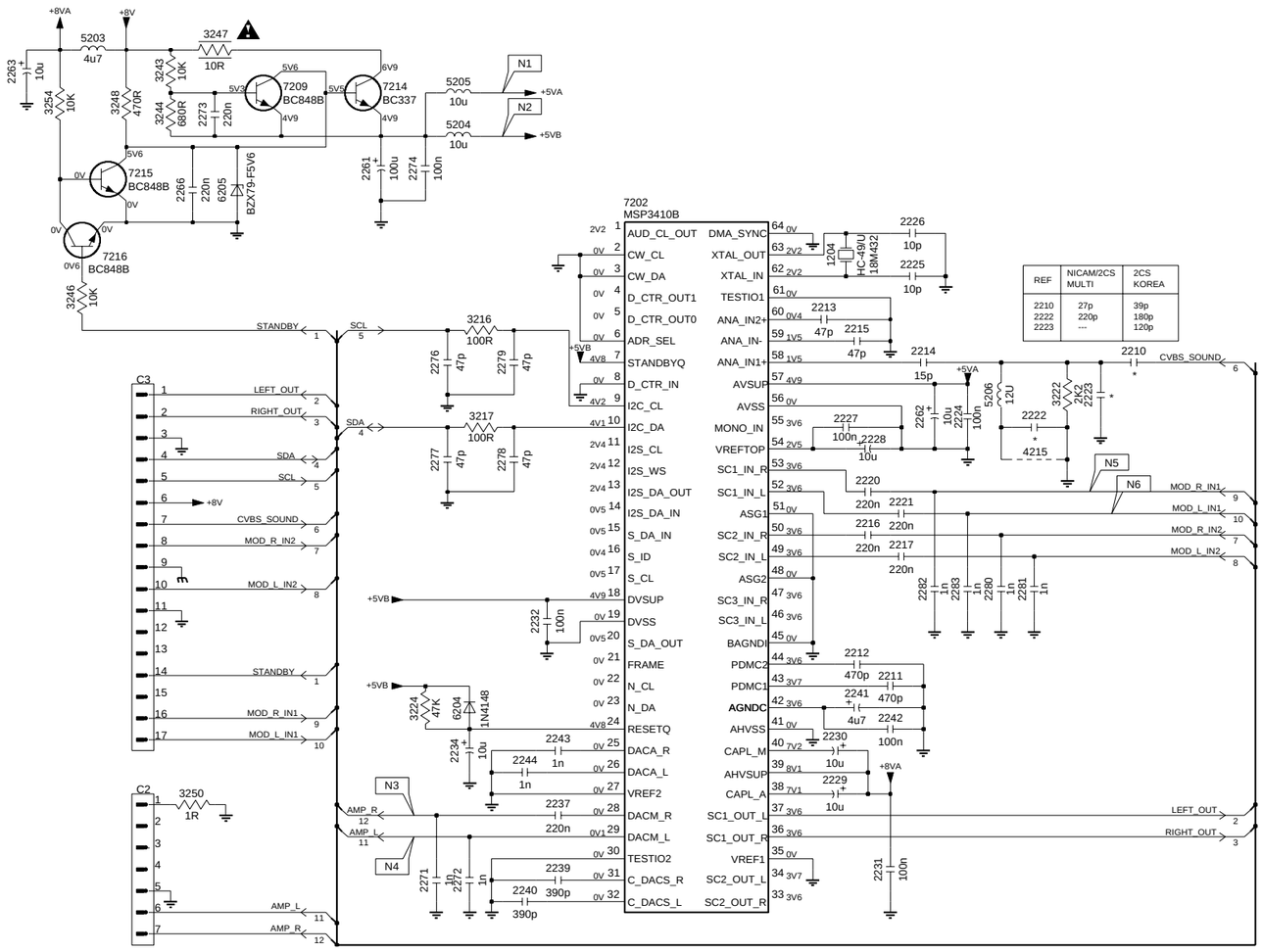

REF	NICAM/2CS MULTI	2CS KOREA
2210	27p	39p
2222	220p	180p
2223	---	120p

N1 4.1V DC
N2 4.2V DC
N3 0.2ms AC

CL 86532018_021.AI
010498

CL 86532018_011.AI
020498

C2 F3
C3 D3
1204 C7
2210 C9
2211 F7
2212 E7
2213 C7
2214 C8
2215 C7
2216 E7
2217 E8
2220 D7
2221 D8
2222 D8
2223 D9
2224 D8
2225 C8
2226 C8
2227 D7
2228 D7
2229 F7
2230 F7
2231 G7
2232 E5
2234 F5
2237 F5
2239 G5
2240 G5
2241 F7
2242 F7
2243 F5
2244 F5
2261 B4
2262 D8
2263 A2
2266 B3
2271 G4
2272 G5
2273 B3
2274 B4
2276 C5
2277 D5
2278 D5
2279 C5
2280 E8
2281 E8
2282 E8
2283 E8
3216 C5
3217 D5
3222 D9
3224 F4
3243 A3
3244 B3
3246 C2
3247 A3
3248 B2
3250 F3
3254 B2
4215 D8
5203 A2
5204 B5
5205 B5
5206 D8
6204 F5
6205 B3
7202 B6
7209 B4
7214 B4
7215 B3
7216 C3

8 Electrical adjustments

Notes :
Unless stated otherwise, the supply voltage used is :

– 220v to 240v +/- 10%, 50 - 60 Hz +/- 5%.
– Voltage and oscillograms are measured in relation to earth.
– Never use a heatsink as earth.

For the adjustments a colour pattern generator PM5418 has been used. Pattern generator type PM5193 (optional) .

8.1 Settings on the carrier panel

8.1.1 + 140 V supply voltage for 25" and 29" picture tubes.

Connect a multimeter (DC) across C2551. Set brightness at mid position and contrast at maximum. Apply a pattern generator with a colour bar. Adjust potentiometer R3572 to 140 Volts +/- 1 V DC.

8.1.2 Geometry adjustments (software adjustment)

Set pattern generator (e.g. PM5418) with colour bar pattern and connect to aerial input with RF signal amplitude - 1mv. Enter SAM mode byusing the Dealer Service Tool or short-circuit service pins M28 and M29 on PCB and switch power "ON". The menu is displayed whenever SAM mode is entered.

Enter into GEOMETRY menu.

- Vertical Amplitude and position
  – Select item VSH and set vertical shift to 31 (Nominal value !!).
  – Select item VAM and align the top of the screen with vertical amplitude.
  – Select item VSL and align the bottom of the screen with vertical slope.

- Horizontal Amplitude and phase
  – Select item HSH and align horizontal shift until picture to center of the screen.
  – Select item EW and align the picture width (only those sets with East-West drive circuit).
  – Select item PW and align East-West parabola for straight vertical lines.
  – Select item TC and align east-west trapezium for a rectangle.
  – Repeat if necessary.

General :

The value can be increment or decrement by pressing the user remote control right or left key. The results of the picture will change according to the selected item.

8.1.3 Focusing

Set pattern generator (e.g. PM5418) with colour bar pattern and connect to aerial input with RF signal amplitude of 1mv. Set brightness and contrast at maximum. Adjusted with focusing potentiometer (upper hole of LOT 5445) for maximum sharpness of the picture.

8.1.4 IF-PLL / RF AGC adjustment (software adjustment)

Set generator (e.g. PM5418) with colour bar pattern and set frequency for PAL to 189.25MHz and for NTSC 55.25MHz with RF signal amplitudeof 3mv (70dBuv) and connect this signal to the aerial input.

Enter SAM mode by Dealer Service Tool or short-circuit service pins M28 and M29 on PCB and switch power ON. The menu is displayed whenever SAM mode is entered. Enter into TUNER menu, select items IF-PLL for AFT alignment

Method Of Alignment

– Set AFW to 80 kHz
– Adjust IF-PLL until AFA & AFB just switching from "0" to "1". The correct value for IF-PLL is 61.

Enter into TUNER menu, select items AGC for RF AGC alignment.

Method Of Alignment

– Connect a multimeter (DC) at pin 1 of tuner.
– Adjust the AGC until the voltage at pin 1 of the tuner is 4Volts +/- 0.4V DC. The correct value for AGC should be 37.

The value can be increment or decrement by pressing the user remote control right or left key.

8.1.5 Picture demodulator adjustment

Connect a pattern generator (e.g. PM5418) with a cross hatch. Connect an oscilloscope (1ms/div) to pin 6 of IC 7225-5A and adjust L5260 so that the overshoot response is minimum . Select a colour bar signal and verify if the picture is OK.

8.1.6 34.4MHz Trap Alignment

NOTE: For Pal multi set only.

GENERAL SET-UP

Connect Frequency Synthesizer PM5193 with sine wave and signal strength of 100mv rms. (100dBuv) via a 50 ohm cable terminated with a RC network(50ohm,10nF) and connect to tuner C-CUT (C-CUT OPEN) . Output detection points at saw filter coil 5040 ,pin 3of 1050. The capacitor is in series with the signal, the resitor is vonnected to ground. Adjust L5040 for minimum amplitude.

8.2 VG2 and White-D settings

8.2.1 Vg2 cut off alignment

Connect a pattern generator (e.g. PM5418) with a black picture , set picture controls of the TV set as following :

Brightness: 25

Colour : 30

Contrast: 50

Switch on the TV set and measure with a 100 : 1 scope probe at the cathodes of the picture tube socket pin 6,8 and 11 of CRT sockets C83/84 ; alternately pin 6 for Green, pin 8 for Red and pin 11 for Blue .

Measure the level of the pluses and adjust the level of the highest pluses by means of the Vg2 potentiometer (lower knob of LOT 5445). The DC level must be 140 Volts +/- 2V DC for 25" tubes and 160Volts +/-2V DC for 29" picture tubes.

8.2.2 White-D adjustment (software adjustment)

Connect a pattern generator (e.g. PM5418) and set it to white raster pattern.

Enter SAM by using the Dealer Service Tool or short-circuit service pins M28 and M29 on PCB and switch power "ON"

The menu will be displayed whenever SAM mode is entered. Enter into WHITE TONE menu and select item NORMAL, DELTAWARM, or DELTACOOL; only one of the three items (R, G or B) will be displayed on the screen. The initial default value setting for NORMAL is 37.The factory settings of the colour temperatures are:

NORMAL	10500K	R = 37	G = 37	B = 37
DELTA COOL	14000K	R = 0	G = 254	B = 249
DELTA WARM	8200K	R = 0	G = 1	B = 3

8.3 Audio adjustments

8.3.1 BTSC Sound adjustment (software adjustment)

Set generator (e.g. PM5418) BLACK(without video) pattern, set audio to stereo mode, carrier "ON" and test data to 1, RF frequency NTSC 187.25MHz with signal amplitude of 1mv and connect this signal to the aerial input.

Enter SAM mode by Dealer Service Tool or short-circuit service pins M28 and M29 on PCB and switch power "ON"

The menu is present whenever SAM mode is entered. Enter into the AUDIO menu and select item according to factory setting. Check the sound quality by the generator setting listed below.

The factory settings for BTSC are :

AUDIO	
AUTO	>
ST-NT	7
SAP-NT	7
LA	7
WIDEB	19
SPECT	19

Abbriviations:

ST-NT -> Stereo Nicam adjustment

SAP-NT -> Second audio program adjustment

LA -> L L' adjustment

WIDEB -> Wideband adjustment

SPECT -> Spectral adjustment

NOTE: ALL VALUES ARE RECOMMENDED NOMINAL VALUES.

8.3.2 2CS/NICAM Sound adjustment (software adjustment)

Set generator (e.g. PM5418) BLACK(without video) pattern, set audio to stereo mode, carrier "ON" , set RF frequency PAL 189.25MHz, NTSC 55.25MHz with signal amplitude - 1mv and connect to aerial input. Enter the SAM mode by using the Dealer Service Tool or short-circuit service pins M28 and M29 on PCB and switch power "ON". The menu is displayed whenever SAM mode is entered.

Enter into AUDIO menu and select item according to factory setting. Check the sound quality by the above generator setting. The factory settings for 2CS/NICAM are :

AUDIO	
A-FM	80
AT	8
STEREO	143
DUAL	113

NOTE: ALL VALUES ARE RECOMMENDED NOMINAL VALUES.

9 Circuit description new circuits

Power supply (diagram A1)

9.1 Introduction

9.1.1 General

The switched mode power supply (SMPS) is mains isolated. The control IC7520 (MC44603AP) gives pulses for driving FET 7518 with duty cycle control at fixed frequency of nominal 40 kHz in normal operation. In stand-by, slow-start and overload situation the SMPS runs at other frequencies than these 40 kHz.

Basic characteristics of SMPS :

- Mains Isolated flyback Converter type
- Input range : 90 - 276 Volts AC (multi voltage) or 150 - 276 Volts AC (single voltage).
- Secondary Sensing by Opto Coupler
- IC7520 is Featured with a Slow-Start circuitry
- Over-and undervoltage Protection Circuit of the secondary supply voltages. In case the load decreases under a certain threshold level the SMPS will switch into stand-by-mode (in stand-by SMPS is in the so called "reduced frequency mode"; this is nominal about 20 kHz).

The (VBATT (+140 Volts for A/P and +130 Volts for LATAM output gives a stabilized (VBATT for 25" and 29" tubes in normal operation and approx. 140 Volts DC for A/P and 130 Volts for LATAM in stand-by mode. IC7541 (=TDA8139) having a stable regulator for +5 Volts and +8 Volts supply and also a built-in protection circuit for +5 Volts and +8 Volts supply is present. If pin 4 is low in the standby mode, the IC disables the supply output voltage of (8Volts, so IC7225 (TDA8374C) line output stage will be shut "down". If no 8 Volts supply is present transistor 7542 will switch on, this will cut off the +VBATT; it also performs a fast CRT discharge. If the power is switched off, pin 6 of IC7541 will be low and the protection circuit starts to shut down the +5 Volts and +8 Volts.

9.1.2 Output voltages

Power output secondary output voltages:

- 14 Volts for the audio amplifier
- 13 Volts for the audio processing
- 5 Volts for the control part (is also available in standby/ reset)
- 8 Volts for the video processing and Nicam
- 140 Volts for A/P and (130 Volts for LATAM for the line output stage and the tuning system

9.1.3 The switching periods of TS7518

The duty cycle of the power supply depends on T-on of FET TS7518 and this is controlled by pin 3 of IC7520. This IC detects the variations of the (VBATT via sensing-winding 8-9 at the primary side of T5545. The switching period of TS7518 can be divided into three main phases: Duty cycle T-on, T-off and T-dead

- During T-on, FET 7518 will switch on and conducts, so the energy that is extracted from the mains is stored into the primary winding 2-5 of transformer T5545 with a linear increasing primary current. The slope depends on the voltage across C2508. Via T-on regulation by pin 3 of IC7520 the duty cycle of the SMPS and so the (VBATT is controlled.
- During T-on FET 7518 will switch off and does not conduct, so all energy "inside" the transformer is supplied to the load via secondary windings of T5545 and the secondary diodes (D6550, D6560 and D6570,D6590). The current through the secondary side of the transformer decreases with a linear slope of T5545.
- During T-dead FET 7518 does not conduct and no energy is extracted from the mains of supplied side, this gives space for T-on and T-off regulation.

9.2 Primary side

9.2.1 Mains input and degaussing

- Mains voltage: this voltage is filtered by L5500 and 5502, rectified by a diode bridge rectifier 6505 and smoothed by C2508 to the DC input voltage for the SMPS at pin 5 of T5545 (e.g. 300V DC for 220V AC mains).
- Multi voltage: Only small adaptations of some component values are needed to achieve this.
- Degaussing : R3504 is a dual PTC (2PTC's in one housing). When switching "on" the set, the PTC is cold and low-ohmic. This would give very high degaussing current. After degaussing the PTC will be heated up and become high-ohmic; during normal operation the degaussing current is very low.

9.2.2 Start up and take over

- Start-up : Via the start-up circuitry 3510, 3530 and 3529 the voltage coming from 220V AC mains is used to start-up IC7520 via the supply pin 1. As long as pin 1 has not reached 14.5 Volts, IC7520 does not start up and only sinks 0.3mA. If Vpin 1 reaches the 14.5 Volts, IC7520 will start (FET 7518 will conduct) and pin 1 sinks a typical supply current of about 17 mA. This supply current cannot be delivered by the start-up circuitry, so a take-over circuit must be present. If no take-over will take place the voltage on pin 1 will decrease and IC7520 will switch off; in that case the restart procedure will start again.
- Take over of IC7520: During start-up a voltage across winding 8 - 9 is built up. At the moment the voltage across winding 8 - 9 reaches approx. (14.5 Volts, D6540 start conducting and takes over the supply voltage Vpin 1 of IC7520 (take over current is approx. 17mA).

Note: This power supply is a SMPS (= Switched Mode Power Supply) and not a SOPS (= Self Oscillating Power Supply).

9.3 Control circuitry; see page 37 for blockdiagram.

9.3.1 IC7520 control mechanisms

IC7520 controls the T-on time of FET 7518 in all three operation modes:

- "Secondary-output-sensing" controls the secondary output voltages via the feedback voltage pin 14.
- "1-prim current sensing" controls both the secondary output voltages and the maximum 1-prim via the current sense voltage pin 7.
- "Demagnetization control" prevents the transformer T5545 from going into saturation via the so called "DEMAG" function at pin 8; this will cause slow-start operation.

9.3.2 Secondary output voltage's feedback (pin 14 of IC7520)

Voltage feedback for T-ON control : Regulation of the SMPS is via pin 14. Winding 2 -5 has the same polarity as winding 16 - 18, so variations of the +VBATT can be sensed and feed-back to pin 14. The control voltage of winding 2 -5 during off period of TS7518 the Opto-coupler 7581 conducted rectified by D6540, smoothed by 2540 and coupled via 7581 and

adjustable by 3572. For the information at pin 14 of IC7520 controls each portion of energy transferred to the secondary side such that the output voltages remain nearly independent of load variations.

9.3.3 I-prim sensing (pin 7 of IC7520)

The current sense voltage at pin 7 is a measure for the I-prim through FET7518. The I-prim is converted into a voltage by R3518. The current sense voltage at pin 7 is used to control both the secondary output voltages and the maximum Iprim (see peak current limiting).

9.3.4 Demagnetization control (via pin 8 0f IC7520)

Winding 8 - 9 has the same polarity as the secondary windings that are supplying the load. As a result the voltage across this winding is negative during T-on, positive during T-off and oscillating during T-dead. The so called demagnetization (block " DEMAG " in IC7520) function at pin 8 of IC7520 is used for blocking the output pin 3 during the time that there is still energy in the transformer (1sec not zero). This is realized by delaying the T-on until the demagnetization is completely finished. In this way the currents and voltages at the moment of switching "on" the FET are controlled.

9.3.5 IC7520 control

The error amplifier (block A) compares the feedback voltage at pin 14 with an internal reference voltage of 2V5. The output voltage V error-out of this error amplifier is fed to another comparator (block B). This comparator also compares the V error-out and the current sense voltage at pin 7. When the current sense voltage at pin 7 becomes higher than the output-voltage of the error amplifier V error-out, the comparator B gives a spike (the output of comparator B is the so called current sensing output-voltage Vcs out).

9.3.6 Flip flop

Flip flop (in block C) drives the output pin 3 via a buffer amplifier (block D). The flip flop is set by the positive edge of the output of the oscillator, V osc and reset by the spike V cs out. As a result the pulse at pin 3 becomes "high" --> T-on starts and by the positive edge of Vosc from the internal oscillator and "low" --> T-on stops by the spike of Vcs out . The T-on start will be delayed in case the transformer is not yet demagnetized; see the slow-start procedures.

9.3.7 Stable load and increasing / decreasing load

In case of a stable load, the feedback voltage at pin 14 and so also the maximum current sense voltage at pin 7 remains the same; as a result the T-on and the duty cycle will remain the same. In case of an increasing load, the secondary output voltage will decrease. The voltage on pin 14 would also like to decrease which causes a V error -out to increase. As a result comparator B will give the pulse later; pin 3 will be "high" for a longer period (longer T-on so the duty cycle increase) and so the secondary output voltages will be increased (corrected). This will give a new balance of feedback voltage at pin 14 and the internal 2V5 reference voltage, at a new and larger duty cycle. As a result of the longer T-on, the maximum I-prim increases, so more energy will be stored in the transformer. In this way more energy will be supplied to the load. In case of a decreasing load, the secondary output voltage increases. The voltage on pin 14 would like to increase which causes V error-out to decrease. As a result comparator B will give the pulse earlier, Vpin 3 will be "high" for a shorter period (shorter T-on so the duty cycle decrease) and so the secondary output voltages will be decreased (corrected). This will give a new balance off feedback voltage Vpin 14 and the internal 2V5 reference voltage, at a new smaller duty cycle. As a result of the shorter T-on, the maximum I-prim decreases, so less energy can be stored in the transformer. In this way less energy will be supplied to the load. In case the demagnetization of the transformer is not yet finished, the positive edge from the oscillator, which will start a new cycle, will be overruled via buffer block D as being the starting point of T-on will be delayed and frequency of the SMPS will go down. This procedure is used during start-up.

9.3.8 Peak current limiting

Peak current limiting is realized by an internal clamp at pin 7. This can never exeeds 1V DC and so the maximum value of I-prim, maximum current through FET 7518, is determined. In case load needs more than the maximum power, by then the I-prim is already at his maximum level so the SMPS will go in overload protection (see also foldback principle explained at overload protection).

9.3.9 Cycle-by-cycle control

The T-on control is regulated on a cycle-by-cycle basis see block C in IC7520. This means that in every cycle the T-on is determined again. By doing so the secondary voltages control, peak current limitation and all protections is very accurate and fast.

9.3.10 Slow-start

As soon as Vpin 1 > 14.5 Volts DC the SMPS will start-up. This will be done by a slow-start procedure where both the frequency and the duty cycle will be built up. The following three phenomena's will take place during start-up:

- The frequency will slowly increase to the nominal frequency of 40 kHz for normal operation and 20 kHz for standby). This is realized via the demagnetization function at pin 8; via this "DEMAG" function, FET 7518 will only conduct and T-on will become "high", when T5545 is totally demagnetized.
- The voltage at pin 5 determines the foldback point. As during start-up this pin 5 is gradually built-up, the foldback point will also gradually increase, see foldback principle explained at overload protection.
- The duty cycle will slowly increase beginning with the absolute lowest possible duty cycle. The maximum duty cycle is determined by C2530 at pin 11 of IC7520, as C2530 is unchanged at start-up.

9.3.11 Standby mode

In standby mode the load will get under a certain threshold level, decrease; see description of standby on the secondary side. The SMPS will determine this threshold level and switch to the so called "reduced frequency mode" at about 20 kHz; this minimal load threshold level is determined by R3532 at pin 12. In the L7.3 chassis the SMPS does not have a burst mode in standby but only a reduced frequency mode of about 20 kHz. In normal operation mode the internal oscillator is about 40 kHz. This frequency is controlled by C2531 at pin 10 of IC7520 and by R3537 at pin 16 of IC7520. In standby mode the internal oscillator is about 20 kHz.; this frequency is controlled by R3536 at pin 15 of IC7520.

9.3.12 FET 7518 gate regulation

D6514 prevents pin 3 of IC7520 of becoming negative because this will destroy the IC due to stray inductance in the gate part.

9 Circuit description new circuits

The safety resistor R3525 limits the drive current to the gate of FET 7518. In a stable situation Vpin 14 is typical 2V4.

9.3.13 Typical values for the L7.3 chassis

Mains Voltage:	
90 - 276V multi voltage	150 - 276V single voltage

Mains frequency: 50 Hz , 60 Hz

Power consumption	in normal mode:
25"	75W + /- 10%
29"	90W +/- 10%

Power Consumption in stand-by mode: 11W

9.4 Protections

9.4.1 Over voltage protection of the secondary voltages

After start-up the supply voltage pin 1 will be take over by positive winding 8 - 9 and after start up pin 1 is the measuring point for the secondary output voltage. After start-up via an internal switch pin 1 is internally tapped (voltage divider) to a voltage which can be measured at pin 6; pin 6 is also a measuring point for the secondary output voltages. If the voltage at pin 6 > 2.5 Volts, the logic in IC 7520 will shut down the output pin 3. This 2.5 Volts threshold at pin 6 is equivalent to 16 Volts DC which is equivalent to a voltage at the supply voltage (V BATT of approx. 108 Volts DC in normal operation and 130 Volts DC in standby. After switching "off", the IC starts up again because of over voltage protection; see slow-start.

REMARK: In case an overvoltage situation is sensed at the secondary output voltages, the SMPS will go in protection; in case the overvoltage situation remains present the SMPS will start slow, etc.; this is a very good audible hick-up mode.

9.4.2 Under voltage protection of the secondary voltages

If the supply voltage at pin 1 < 9 Volts DC the output pulse at pin 3 will be shut down.

Note: The DC voltage at pin 1 is equivalent to a voltage at V BATT of approx. 70V DC in normal operation and the voltage at pin 1 of 7.5 Volts is equivalent to a voltage at (V BATT of approx. 55V DC in normal operation and 65V DC in standby. In case an over voltage situation is sensed at the secondary output voltages, the SMPS will first switch "off" the pulses and later the complete IC 7520 will be switched "off". In case the IC 7520 is switched "off" also the SMPS will switch "off". In case the under voltage situation remains present, the SMPS will give under voltage protection like slow-start, etc; this is a very good audible hick-up mode.

9.4.3 Unload protection

In case the load goes down e.g. the line goes down because of stand-by mode or some failure in the line circuitry this will be detected by IC7520 via I-prim and secondary output voltages sensing. In case the load decreases below a certain threshold the SMPS will switch in "reduced frequency mode" of about 20 kHz ; this threshold is determined by the voltage level at pin 12 of IC 7520.

REMARK: In case of an unload situation the set will switch to "low frequency mode" or standby mode. Whether this unload situation of the SMPS is caused by the standby command or by a failure e.g. in the line circuitry this can be determined by switching on the set again which the remote control. In case of standby mode the TV will switch "on" again; in case of unload situation the set will NOT switch "on".

9.4.4 Overload (short-circuit) protection

If the secondary load becomes too high, I-prim also becomes too high; this is sensed by the current sense voltage at pin 7. This voltage at pin 7 is not allowed to exceed 1 Volts DC and it has current limiting. As the I-prim is limited, the secondary output voltages will drop and supply voltage at pin 1 will also drop. As soon as pin 1 < 9Volts DC the driving pulses at pin 3 will stop. As a result of these two mechanisms in case of an overload the secondary voltages will drop very fast, this is called the foldback mechanism. The foldback point can be adjusted by pin 5 of IC7520 and this point is adjusted to a maximum tolerable output power of 85W at 90 Volts AC and 165W at 276Volts AC. After this foldback the IC starts up again (see slow-start); in case the overload situation remains present, the SMPS will give foldback again, slow-start, etc.: as a result in case of short-circuit or overload the TV will be in a good audible hick-up mode.

9.5 Secondary side

9.5.1 Output voltages

See 9.1.2 for output voltages.

9.5.2 Regulator IC TDA 8319 (7541)

This is a low-dropout regulator. This IC has an output voltage of +5 Volts , +8 Volts and RESET signal; the input is 11 Volts.

The Pin configuration of this IC is listed below:

- Pin 1 of the IC is input 1 and the output 1 pin 9 that is +5 Volts DC.
- Pin 2 of the IC is input 2 and the output 1 pin 8 that is +8 Volts DC.
- Pin 3 of the IC is a timing capacitor input and controls the turn-on delay of the reset signal.
- Pin 4 of the IC is a disable pin connected to standby pin of the microcontroller, if the voltage below 0.5 Volts the +8 Volts output will be disabled.
- Pin 5 of the IC is a common ground .
- Pin 6 of the IC is a reset voltage output connected to the microcontroller. This reset output is developed with respect +5 Volts output level of 4.95 Volts.
- Pin 7 of the IC is a program pin for output 2, in this circuit this output pin 8 is programmed to +8.2 Volts by resistors 3552, 3553 and 3554.

Other features of this IC:

- Built-in thermal protection.
- Built-in over current and short circuit protection for +5 Volts and +8Volts.
- Low dropout voltage

9 Circuit description new circuits

9.6 SINGLE CHIP PROCESSOR IC7225 (=TDA8374)

Introduction :

In this chip most of the video, audio and sync circuits are integrated and in the diagrams the IC is split up into 5 parts: 5A,5B,5C,5D and 5E.

- IC7225-5A, video detector ,see diagram A4.
- IC7225-5B, source select en PAL demodulator ,see diagram A6.
- IC7225-5C, video control, see diagram A4.
- IC7225-5D, horizontal and vertical sync, see diagram A3.
- IC7225-5E, mono sound demodulator, see diagram A4.

9.6.1 IC7225-5A, IF video detector, see diagram A4

Tuning system

For the tuner 1000 there are two possibilities: VST type or PLL type and in both cases the tuner is controlled by the uC. The VST tuner is controlled via V_TUNE, AFC and the BS1, BS2 band switching signals; the PLL tuner is fully I2C controlled. IC 7225-5A contains the IF amplifier and the IF detector, the IF signal is present at the output pin 11 of the tuner. BS1 and BS2 (pin 17-18) switching signals used for band switching of a VST tuner.

	BS1	BS2
VHF1	0	1
VHF2	1	0
UHF	1	1

IF bands pass filter , the IF bands pass characteristic is determined by the band-pass of the SAW filter 1015, listed below you will find the possibilities :

- For PAL BG sets a SAW filter with 5.5 MHz bandwidth is used (33.4 to 38.9 MHz).
- For PAL 1 sets a SAW filter with a bandwidth of 6.0 MHz is used (32.9 to 38.9 MHz).
- For PAL BG/SECAM BG/LL' sets a SAW filter with 6.5 MHz band switch is used to enable BG/I/LL' reception (33.9 to 40.4 MHz).
- For PAL BG/SECAM BG/DK sets a SAW filter with a bandwidth of 6.5 MHz is used (32.4 to 38.9 MHz).

IF-demodulator

IF-demodulation is done with reference circuit L5260 at pin 3 and 4 of IC7225-5A; AGC control of tuner via pin 54 IC7225-5A. Top sync level is used for AGC inside IC7225-5A. AGC adjustment is done by 1(C control via entry into the SAM service menu. C2202 at pin 53 determines time constant of the AGC. Base band CVBS signal at pin 6 of IC7225-5A (normal -3V2) is fed to the sound trap filters (1206, 1207, 1208, 1209 and 5206) and returns to pin 13 of IC7225-5B for source selection and video processing (diagram A6). The NTSC_ SW signal from the control microprocessor switches on transistors 7216 and 7217 to activate filter 1209 when an NTSC signal is received. Demodulation for sound IF takes place for the various signals as follows: For single mono signal, the CVBS_Sound signal goes to filter 1104 for 4.5 MHz and filter 1102 for 5.5MHz. The sound _IF is connected to pin 1 of IC7225-5E for demodulation.

9.6.2 PAL/NTSC Processing (IC7225-5B, see diagram A6)

IC7225-5B contains : source selector and PAL/NTSC colour decoder.

The main functions are :

- Source Selection
  The input selector has CVBS_INT< CVBS_EXT1,Y_CVBSEXT2, C_EXT2 as inputs which can be selected via the 12C bus.
- Colour Decoder; the main functions are :
  - PLL/VCO
    The PLL operates during the burst key period. It synchronizes the VCXO oscillator with the frequency and phase of the incoming chroma burst. For alternating burst (PAL standards), a loop filter enables the PLL to synchronize with the average burst (180 degrees phase).

- PAL/NTSC Identification
- Secam Interface
  The 0 and 90 degrees reference signals from the VCO oscillator are supplied via the HUE phase circuit to the (B-Y) and (R-Y) burst demodulators respectively. The demodulated burst from the (B-Y) burst demodulator is supplied both to ACC detector and NTSC indent circuit; the NSTC indent circuit is an integrator. Once the integrator output exceeds the NTSC killer level, an NTSC burst has been identified (IDN=1). Therefore the IDN information provided the ASM (Automatic System Manager) with NTSC colour indent information. The demodulated burst from the burst from the (R-Y) burst demodulator is supplied to the PAL identcircuit via a AL switch; the PAL ident circuit is also an integrator. Once the integrator output exceed the PAL killer level, a PAL burst has been identified (IDP=1). The IDP information provides the ASM with PAL-colour ident information.
  The SECAM interface allows bi-directional communication between IC7241 (TDA8395) and the ASM for SECAM identification. If the VCO oscillator is oscillating at 4.43 MHz, the reference frequency of 4.43mhz is superimposed on a DC level and is supplied from pin 33 of IC7225 to pin 1 of IC7241. If PAL/NTSC signals are identified, the reference frequency is continuously available at pin 33 and superimposed on a 1.5V DC level. When SECAM is identified by IC7241, the reference signals which is generated in packets form and superimposed on a 5V DC level is supplied to pin 33 of IC7225.The ident signal (IDSM=1) is supplied to the ASM.
- ASM (Automatic System Manager)
- (R-Y)/(B-Y) demodulation
  The ASM is able to decode PAL/NTSC colour standards and in combination with IC7241(TDA8395), multi standard applications can be realized. The different possibilities are controlled by the 12C bus input commands which are communicated to the ASM via the 12C bus. The 12C bus input commands also indicates which crystals must be connected to pins 34 and 35. This is essential for correct calibration of the horizontal oscillator.
  For PAL/NTSC standards, the (B-Y)/(R-Y) baseband signals are extracted from the chroma signal by the (B-Y)/(R-Y) demodulators, filtered and supplied via the output switch to pins 29 and 30. If SECAM is identified by the SECAM decoder IC7241 and no PAL/NTSC is identified by the ASM, then the ASM will open the switch (B-Y)/(R-Y). This implies (B-Y)/(R-Y) signals from the SECAM decoder will be directly connected to pin 29 and 30 without extra loading.

9.6.3 Video controller (IC7225-5C, see diagram A4)

The main functions are :

– Y/(B-Y)/(R-Y) signal processing/matrix
– RGB signal selection/processing/output stages
– Black stretcher
– Beam current limiter (BCL,PWL)
– Automatic black current stabilization (ABS) .

Y/(B-Y)/(R-Y) signal processing/matrix

The luminance at pin 27 is internally AC coupled to the luminance clamp, which is operational during burst key period. The luminance signal is supplied to the RGB matrix circuit via the black stretcher. The (B-Y)/(R-Y) signals supplied to pins 31 and 32 are clamped during the burst key period. The signals are then supplied to the colour difference matrix to select the desired matrix formv either PAL, NTSC or Japanese NTSC matrix. The selected matrix is controlled via the 12C bus. For RGB matrix the signal outputs from the colour difference matrix are added with the luminance signal in colour to generate the internal RGB signals.

RGB signal selection/processing/output stages

Within the RGB signal selection there are three modes:

– RGB (internal)
– Fast RGB insertion (R_TXT G_TXT B_TXT on pins 23, 24 and 25)
– OSD-mode

Teletext

Two different types of microprocessors IC7600/7601 are used: one with teletext(TXT) and one without teletext.

The micro-controllers are:

P83Cx66	42 pins	Normal	ROM size varies
SAA529x	52 pins	Control withTeletext	ROM size varies
P83CX69	52 pins	Control with Close caption	ROM size varies

Type of micro-controller	Type of tuning	System	Countries
P83Cx66	VST	PAL/SECAM	AP
	PLL	NTSC	Latam
SAA529x	VST	PAL/SECAM	AP
P83Cx169	PLL	BiNorma/ TriNorma	Latam

The oscillator to be used is 12MHz; a crystal oscillator will be used for all the micro-controllers.

- In case of TXT this function is integrated together with the control part in one and the same uC. This uC is indicated in the diagrams with the outer pin numbering.
- In case of no TXT another (C is used with less pins. This uC is indicated in the diagrams with the internal pin numbering.

In the description below, the pin numbers are the numbers mentioned outside the housing of IC 7600 (IC7600 with TXT and IC7601 without TXT). In case of the (C with integrated teletext function the CVBS-TXT signal is fed to pin 23, the TXT and OSD- information are combined at pins 32,33 and 34.

Before the RGB signal selection the RGB signals are clamped to similar DC level during burst key period. The selection is controlled by the RGB insertion input voltage at pin 26.

Voltage at pin 26	selected RGB signals
< 0.3V	RGB(internal)
0.9V < V < 3V	(R_TXT G_TXT B_TXT (fast insertion at pins 23, 24 and 25)
> 4V	OSD can be inserted at the RGB-out pins

The contrast, brightness and white-point RGB adjustment on the selected RGB signals are controlled by 12C commands. After the adjustment, three RGB black levels are added to the RGB signals. These three signals are blanked when the RGB blank signal is active. The RGB output stages supply the buffered RGB signals pins 21, 20 and 19.

Black Stretcher

The black stretcher circuit, which is only operational during line scan, extends the gray signal level towards the actual black level (= actual black level measured during burstkey). The amount of extension is dependent on the difference between actual black level and the darkest part of the incoming video signal. The darkest part of the videosignal is registered in the capacitor at pin 39 by means of an internal discharge current of approximately 130uA. The black stretcher is made inactive if the voltage at pin 39 is set to ground. This is done by turning on transistor 7220, the command blackstraw coming from the microprocessor (if power button on the remote control unit is activated).

Beam Current Limiter

The beam current limiter circuit functions as an average white limiter as well as peak white limiter. The average white limiter needs external circuitry comprising of 7265, and associated components to function; the peak white limiter is an internal detection circuit. The function of the beam current limiter (average white / peak white limiter) reduces the contrast and brightness of RGB signals. For beam current limiting, the difference in beam current (1BCL) and an internal charge current (1CHARGE) is stored in capacitor 2460 on pin 22. If 1BCL > 1CHARGE voltage (VBCL) at pin 22 will decrease. For beam current limiter contrast reduction begins if VBCL < 3.5V and brightness reduction begins if VBCL < 2.5V. VBCL is normally about 4V if the beam current limiter is not active .

The contrast and/or brightness reduction of the RGBout is proportional to the voltage decrease at pin 22.

9.6.4 Horizontal synchronization IC 7225-5D and the line output stage (see diagram A3)

Protections:

The line deflection incorporates protections like:

- X-ray protection. If the EHT will become too high, the tube will radiate too much X-ray, this is detected by monitoring the flyback pulses at pin 11 of the LOT.
- Beam current protection. If the beamcurrent becomes too high the Bimos is able to reduces this by making the EHT_info line low. The circuitry around transistor 7481 in circuit diagram A2, will detect this and create a PROT signal.
- The E/W amplifier has two protections. One protection for overcurrent, for exampleshort circuit of E/W FET and one protection for overvoltage; like interrupted capacitor in lower half of the diode modulator.

Start-up of the horizontal oscillator via the (8V gives a start-up current to pin 37; if the voltage on pin 37 exceeds 5V6 the horizontal oscillator starts to oscillates at approx. 25kHz. Only if the supply pin of IC 7225 (= pin 12 at IC 7225-5A in diagram A4) becomes 8V the line frequency will change to 15625 Hz. The horizontal synchronization separator separates horizontal pulses out of CVBS signals and synchronizes the free-running horizontal sawtooth generator. The horizontal oscillator sawtooth is converted into a square wave voltage with variable duty cycle. This square wave at pin 40 is fed to the line output stage. The time constant of the synchronization circuit is automatically internally determined by IC 7225-5D. Pin 41 is SANDCASTLE output and also HORIZONTAL FLYBACK input.

- The SANDCASTLE has an output current a some mA, the amplitudes of sandcastle pulse is : burst 5V3, line blanking 3V and during frame blanking 2V.
- If the input acts as a HORIZONTAL FLYBACK pulse, the input has a current of 100-300 mA. This horizontal flyback pulse compares the phase of flyback pulse with phase of the horizontal oscillator; if the phase is not correct the duty cycle of horizontal oscillator will be adjusted.
- Flash protection: The BCI info is applied to pin 42 of IC7225-5D. If due to a flash in the picture tube the voltage at pin 42 is > 6V, the horizontal drive will be switched off immediately. If the voltage is again < 6V the horizontal drive will be switched on again via the slow start procedure.
- EHT over voltage protection. The BCI info is also applied to pin 50 of IC7225-5D. First the BCI will compensate vertical picture amplitude variations due to beam current variations. The control range is between 1.2V and 2.8V. However if the voltage at pin 50 exceeds 3.9V the EHT overvoltage protection will be activated and the horizontal drive is switched off.

The line output circuitry
In principle the line output stage pin 40 of IC 7225-5D drives the line output stage consisting of TS 7445 and transformer 5445 via drivers TS 7440-7441. The line output stage supplies the deflection current and the following supply voltages (see also the power supply block diagram) :

Output voltage (See diagram A2) LOT (5445 Line output transformer) output voltage

- EHT, + 200V, Vg2, focus and ff for the picture tube.
- 200V for the CRT drive
- + 5V for the control and tuner supply
- + 9V for the tuner supply
- + 11V for the control and vertical drive output
- - 11V for the vertical drive output

Vertical synchronization IC 7225-5D and the frame amplifier IC 7401
The vertical oscillator (= 50Hz) is controlled by the incoming video signal. The vertical output is driven in anti-phase via the pins 46 and 47. At pin 41 the so called "Sandcastle " pulse is present; the sandcastle pulse is applied to several parts of the circuits for timing purposes.

Frame amplifier
In principal the frame output stage IC 7401 (TDA9302H) is used for the vertical deflection. This IC is controlled at pins 1 and 3 by the vertical control signal of IC 7225-5D and a deflection current is generated at pin 5. The vertical flyback signal is generated at pin 3 of this IC.

Protection of IC 7401; depending on +11V and -11V supply to drive the vertical deflection CRT. In case of supply voltage +11V or -11V needs a too high current, the VFL pin 3 of IC 7401 voltage will drop < 6.5V. As a result the VFL will feedback this to pin 37 of 7600 micro processor and this will switch the supply to stand-by mode.

9.6.5 Sound detector (IC7225-5E, diagram A4)

Single FM-mono sound for demodulation will take place in IC7225-5E. No adjustment are required because of automatic PLL tuning from 4.2 to 6.8 MHz .

9.7 Information of NVRam, tuners, video and audio I.C.'s.

The following components are also applied in this chassis:

- IC7620 in circuit diagram A5: NVRAM : ST24W04B1 (Non-Volatile Memory). The ST24W04B1 is a 4k bit EEPROM device. The enable pins E1 and E2 selects between maximal four different ST24W04B ICs. Last status of a set is stored in the EEPROM and can be retrieved whenever there is a power interruption
- Tuner 1000 in circuit diagram A4: UV1355 or UV1336 is applied :
  The list of tuners is as follows:
  For 25" and 29" AP, tuner type UV1335 is used; Type of tuning is VST.
  For 25" and 29" Latam, tuner type UV1336 is used; Type of tuning is PLL.
- Audio IC's:
  - IC7310: TDA9860, Audio processor IC
  - IC7315: TDA9850, BTSC DBX decoder with SAP
  - IC7312: AN 7312, AVC= automatic Volume Correction
  - IC7202: MSP3410D, Nicam stereo decoder
  - IC7202: MSP3400C, 2CS Korea and 2CS German decoder
  - IC7313: HEF4052, switch function IC
  - IC7311: TDA7057A , 2X3W stereo sound amplifier

For European and A/P sets we can have 2CS, mono/stereo/ dual sound: this is decoded by IC7202(=MSP3400/MSP3410) on Nicam sound panel "C". Also Nicam mono/stereo/dual sound is decoded by IC7202.

For A/P, Latam and USA we use the BTSC decoding ; see IC7315 in circuit diagram A8.

NTSC/SECAM sound system IC (BTSC decoding IC)

General description of BTSC specifications

The BTSC sound system is based on the AM-FM method and is capable of broadcasting:

- MONO information {only MONO Carrier modulated}
- STEREO information {MONO C -> 1/2(L+R) and STEREO SC -> 1/2(L-R)}
- DUAL information {MONO C -> language A and SAP SC -> language B}

9 Circuit description new circuits

– STEREO & SAP information
– STEREO: {MONO C -> 1/2(L+R) and STEREO SC-> 1/ 2(L-R)} and SAP:{second audio channel}

The sinlge FM-mono sound decoding will take place in IC7225-E; see circuit diagram A4.

IC7312 (= AN7318S) in diagram A7 is an Automatic Volume Correction (AVC) present. Automatic volume correction (AVC) function provides a constant output level of -18dBFS for input levels between 0dBFS and -24dBFS. In this way it is possible to adjust different sound sources (eg Terrestric/SAT channels, SCART) to equal volume level. The increased volume of advertising is compensated as well. The volume correction step width is quasi continuosly. The filter maximum is performed with an attack time of 16ms and a programmable decay time i.e 8,4,2 sec and 20ms

IC7311: TDA7057AQ in circuit diagram A7 is a 2X3W stereo sound amplifier.

BLOCK DIAGRAM MC44603P

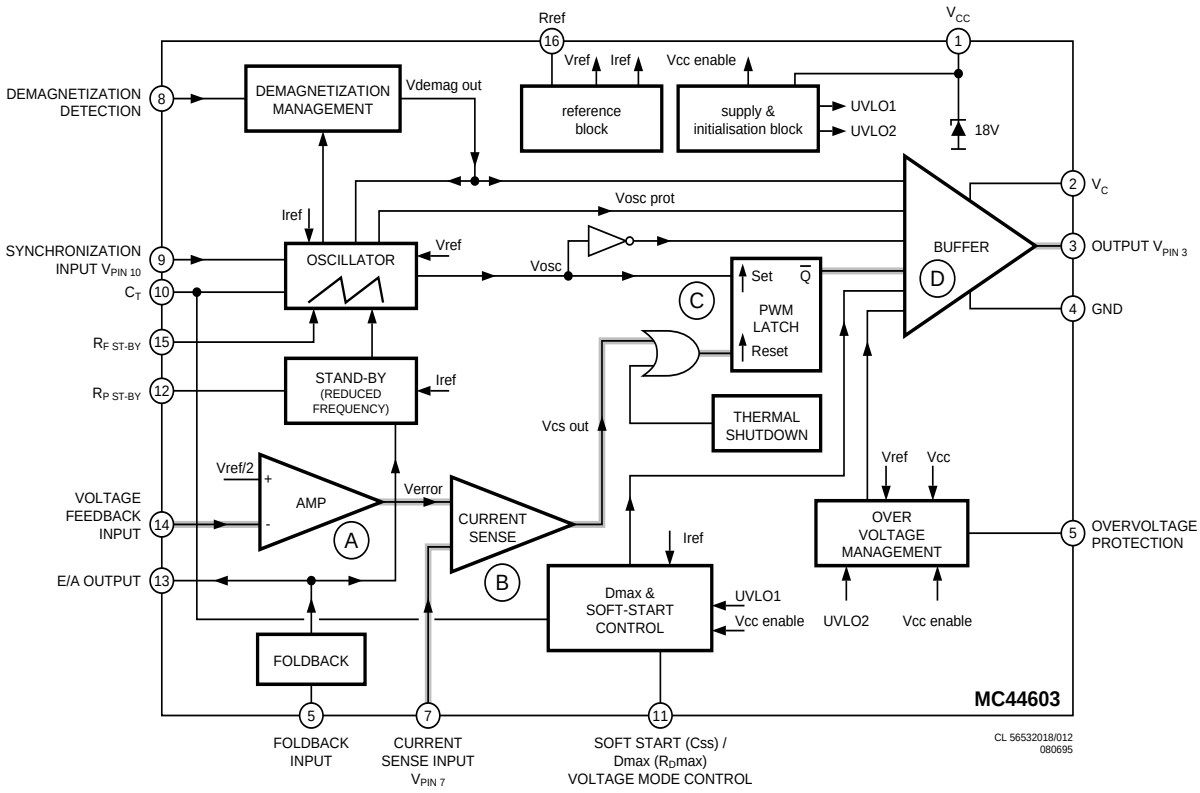

Figure 9-1

Connecting peripheral equipment

Equipment such as VCR, Laser disc player, VCD etc. could be connected to the video and audio (AV) sockets at the back of the TV. Switch off the TV and equipment before making any connection.

Connection for playback

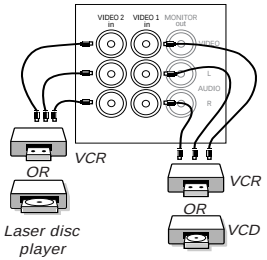

1. Connect to AV sockets

- connect the corresponding sockets of the equipment to that of the TV.
- to view the playback, select a channel named AV1 (if connection is made to sockets at VIDEO 1 in) or AV2 (if connection is made to sockets at VIDEO 2 in).

Note : If you have connected a computer game set to VIDEO 1 in, select a channel named GAME1 to playback. If your connection is made to VIDEO 2 in, then select GAME2 to playback.

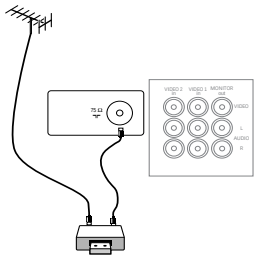

2. Connect to aerial socket
(only for VCR)

The playback on your VCR is considered a TV channel by your TV if you connect via the aerial socket. You must tune in to your VCR's test signal and assign the channel number 0 to it. Refer to your VCR's instruction manual for more details.

- connect the RF cable to the VCR's "RF in" and connect the "RF out" of the VCR to the aerial socket of the TV.
- select channel 0 and tune in to to your VCR's signal.
- to view the playback, select channel 0.

The TV's controls

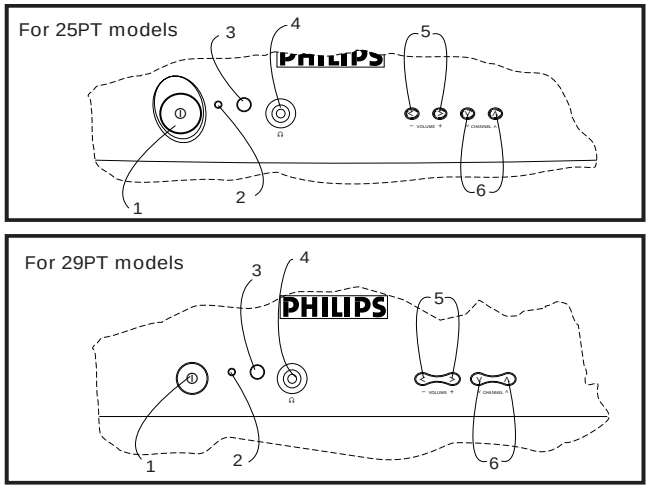

1. Mains power	Switch on or off the TV.
2. Red light indicator	When light is on, it indicates that the TV is on standby. Note :If no signal is detected by the TV after 10 minutes, it will switch to standby automatically.
3. Remote control sensor	For the remote control to work, it must be activated within the operating range of this sensor.
4. Headphone socket	For connection of headphones.
5. Volume adjustment	To adjust volume level. Press these 2 keys simultaneously will call up the 1st level menu. Press these 2 keys again will exit menu. Works as cursor left (VOLUME —) or right (VOLUME +) in a menu.
6. Channel selection	To select a lower or higher channel number. Works as cursor up (CHANNEL ∧) or down (CHANNEL ∨) in a menu.

Using the remote control

For the remote control to work effectively, it has to be operated within the recommended operating range to the remote control sensor on the TV.

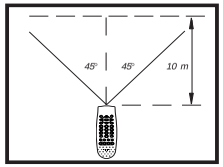

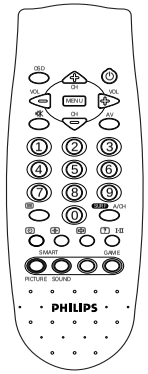

Press :		Result :
OSD	Screen information	In TV mode : Display channel number and sound mode In a menu : Exit menu.
	Standby	Switch off TV and a red indicator lights up. To switch on TV again, press either the 0 to 9, CH, CH, A/CH, AV or key.
AV	External source	Select the external channels AV1 or AV2.
	Mute	Switch off the sound of the TV. Press again to switch on the sound.
MENU	Menu	Call up the main menu. If there is an existing menu, pressing this key will bring you back to the previous level menu. If you are in the 1st level menu, pressing this will exit the menu.
CH CH	Channel selection/ cursor up or down	TV mode : Select a higher or lower channel number . In a menu : Scroll up or down.

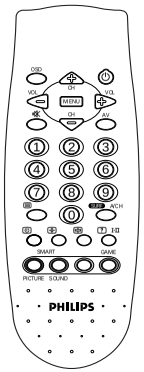

Press :		Result :
VOL VOL	Volume adjustment /cursor right or left	TV mode : Adjust the volume of the TV set. In a menu : Select or execute.
0 to 9	Digit	Key in numerals e.g. confidential code in child lock and in channel selection. For a 2-digit channel, the second numeral must be entered before the dash disappears.
SURF A/CH	Surf or alternate channel	Surf mode : Add or delete channel from the surf list. View channel in the surf list. A/CH mode : Return to the previous channel.
Teletext function:		Refer to the section on "Teletext".
I-II	Sound mode	Switch from stereo to mono sound (for stereo transmission) or choose between first language or second language (for bilingual transmission).
GAME	Game	Select preset channels for games.
SMART PICTURE SOUND	Smart controls	Select the presets for sound and picture.

Menus

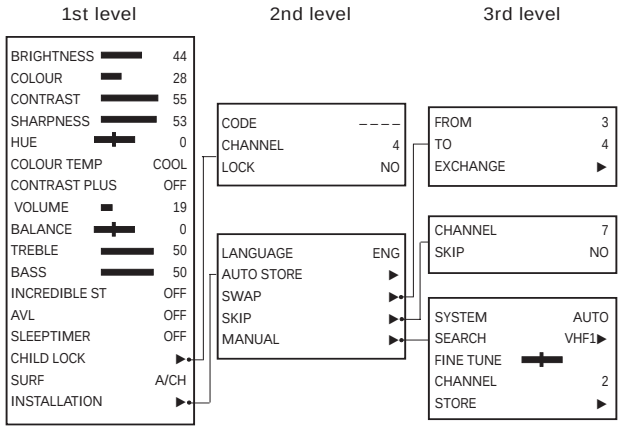

To call up the 1st level menu :

- Press MENU key.

To use the menus:

- Press the cursor keys.

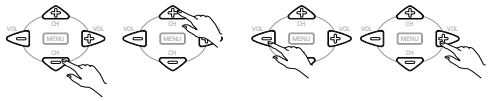

scroll up *scroll down* *select or execute*

To exit from a menu:

- Press MENU key to go back to the previous level.

OR

- Press OSD key to exit.

Installing the TV

Selecting the menu language

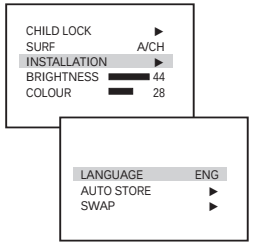

1. Call up 1st level menu with the MENU key.
2. Scroll up with the key to highlight INSTALLATION.
3. Select INSTALLATION with the or key.
   LANGUAGE is highlighted.
4. Select the language of your choice with the or key.
   From now on, all menus and screen information will be in the language that you have chosen.
5. Exit with the OSD key.

Tuning in the TV channels

There are 2 ways to tune in channels : automatically (by AUTO STORE) or manually (by MANUAL menu).

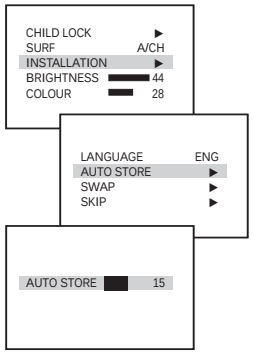

Auto store

Use to tune in channels automatically.

1. Call up 1st level menu with the MENU key.
2. Scroll up with the key to highlight INSTALLATION.
3. Select INSTALLATION with the or key.
4. Scroll down with the key to highlight AUTO STORE.
5. Select AUTO STORE with the or key.

A tuning bar appears and the TV will automatically store all available channels. Channels will be stored starting from the next channel number .

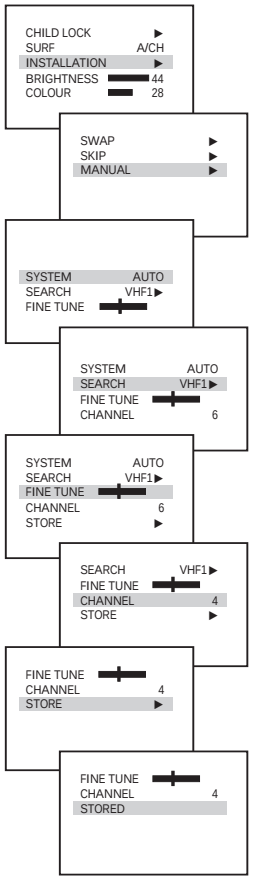

Manual

This menu enables you to search and store every available channel manually.

1. Call up 1st level menu with the MENU key.
2. Scroll up with the key to highlight INSTALLATION.
3. Select INSTALLATION with the or key.
4. Scroll down with the key to highlight MANUAL .
5. Select MANUAL with the or key.
6. Scroll down with the key to highlight SEARCH.
7. Select the band (UHF, VHF1 or VHF3) with the key.
8. Press the key to start searching. Searching stops once a channel is available. If you decide to store the channel, proceed to the next step. If not, press the key to start searching again.
9. If you wish to fine tune the channel, scroll down to highlight FINE TUNE. Press the or key to fine tune.
10. Scroll down with the key to highlight CHANNEL and assign a channel number to the channel that you found.
11. Scroll down with the key to highlight STORE and press the or key to store the channel.
12. Exit with the OSD key.

How to deal with poor picture reception

You can use these 3 ways to deal with poor picture reception of your TV

- Skip channels
- System selection (for multi and dual system sets only)
- Fine tuning

Do the following steps to go into INSTALLATION menu.

1. Call up 1st level menu with the MENU key.
2. Scroll up with the key to highlight INSTALLATION.
3. Select INSTALLATION with the or key.

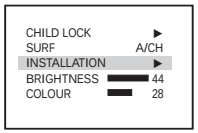

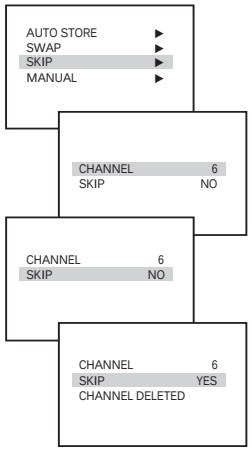

Skip channels

This menu enables you to skip channels which have bad reception or channels which you do not watched often. Once a channel is skipped, you will not be able to select it with the CH or CH keys.

1. Scroll down with the key to highlight SKIP.
2. Select with the or key. CHANNEL is highlighted.
3. Enter a channel number.
4. Scroll down with the key to highlight SKIP.
5. Select YES with the or key. CHANNEL DELETED appears to confirm that the channel is skipped.

To unskip channels, repeat step 3 to 5 but select NO instead of YES.

6. Exit with the OSD key.

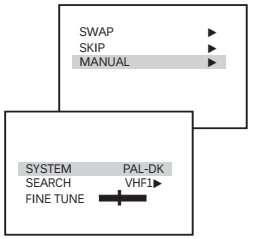

System selection

For multi system sets:
This feature enables you to select either PAL-BG, PAL-I, PAL-DK, SECAM-DK, NTSC M or AUTO. If AUTO is selected, it means that the system is automatically selected according to the current transmission.

For dual system sets:
This feature enables you to select either PAL-DK or PAL-I.

For single system sets:
This feature is not selectable.

1. Scroll down with the key to highlight MANUAL . SYSTEM is highlighted.
2. Press the or key to select a suitable system.
3. Exit with the OSD key.

Sound settings

Personal settings

You can do adjustment on VOLUME, BALANCE, TREBLE and BASS of a picture via the 1st level menu. Adjustment on treble and bass will automatically be stored in the PERSONAL mode of the SMART SOUND feature.

How to do adjustment

1. Call up 1st level menu with the MENU key.
2. Scroll up or down with the or key to highlight the item that you wish to adjust.
3. Select or adjust with the or key.
4. Exit with the OSD key.

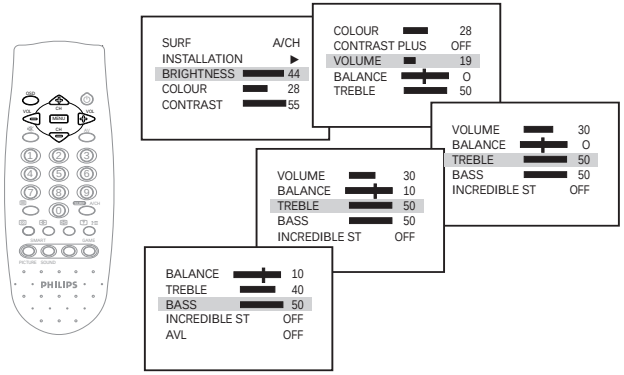

Incredible stereo

A feature to enhance stereo sound. Adjustment done will automatically be stored in the PERSONAL mode of the SMART SOUND feature.

1. Call up 1st level menu with the MENU key.
2. Scroll down with the key to highlight INCREDIBLE ST.
3. Select ON with the or key.
4. Exit with the OSD key.

AVL-Auto Volume Leveller

This feature if switched on will automatically adjust any sudden changes in the TV's volume to a preset level.

1. Call up 1st level menu with the MENU key.
2. Scroll down with the ▽ key to highlight AVL.
3. Select ON with the ◁ or ▷ key.
4. Exit with the OSD key.

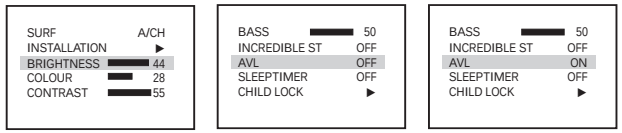

Smart Sound

These are some sound presets on the TV for your viewing pleasure. Press the SMART SOUND key repeatedly to select VOICE, MUSIC, THEATRE or PERSONAL*.

*(Note *: "NORMAL" for certain model)*

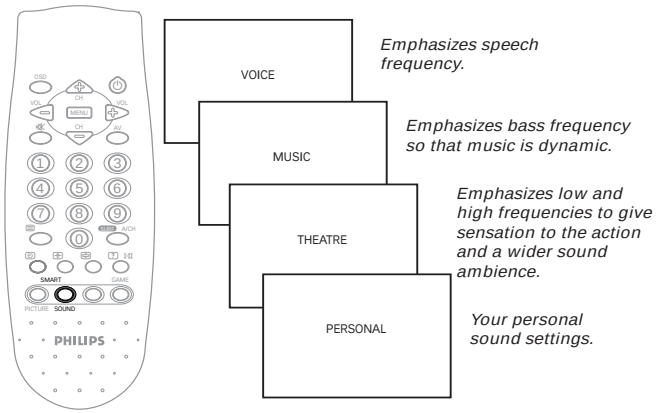

Other features

Sleeptimer

Sets timer to switch TV to standby in steps of 15 minutes to a maximum of 120 minutes. To disable timer, set to "OFF".

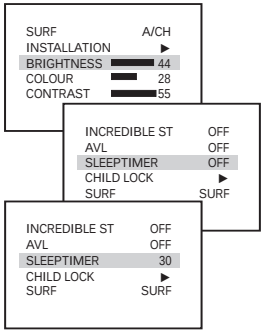

To set timer

1. Call up 1st level menu with the MENU key.
2. Scroll down with the ▽ key to highlight SLEEPTIMER.
3. Select time period with the ◁ or ▷ key.
4. Exit with the OSD key.

Child Lock

This feature enables you to lock channels which you do not wish others e.g. children to watch. You have a choice to lock all channels (inclusive of AV1 or AV2) or individual channel (up to a maximum of 5 channels). Once a channel is locked:

- if you call channels up with the CHANNEL ∨ or ∧ keys on the TV, there will be no picture and sound.
- access to the INSTALLATION sub-menu is disabled

You can only call up channels with your remote control. A message "LOCKED" and "CODE – – – –" appears on the screen each time you try to call up a channel with the controls on the TV. To bypass the lock mode, you will need to use your remote control to key in the 4-digit confidential code that you have entered when you locked it.

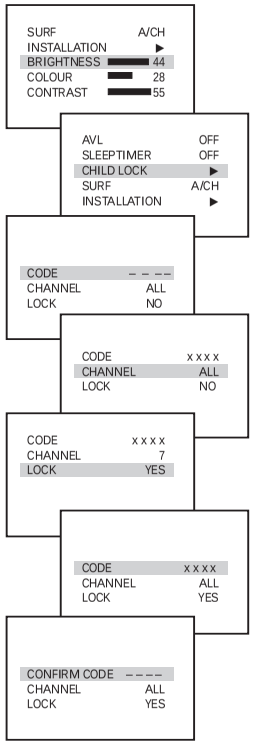

To lock channels

1. Call up 1st level menu with the MENU key.
2. Scroll down with the key to highlight CHILD LOCK.
3. Press or key to enter menu.
4. Key in the universal code 8888.
   If you do not key in the code, you will not be able to change anything on this menu.
5. Press or key to select ALL (to lock all channels) or enter a channel number (to lock individual channels).
6. Scroll down with the key to highlight LOCK.
7. Press or key to select YES to lock the selected channel/s.
8. Repeat steps 5 to 7 for other channels which you wish to lock. Once you have completed, proceed to the next step.
9. Scroll up with the key to highlight CODE. Key in your own 4-digit confidential code. “CONFIRM CODE” appears.
10. Key in the 4 digits again to confirm and use it whenever you want to access to locked channels.
11. Exit with the OSD key.

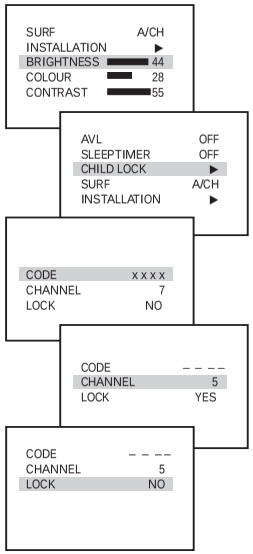

To unlock channels

1. Call up 1st level menu with the MENU key.
2. Scroll down with the key to highlight CHILD LOCK.
3. Press or key to enter menu.
4. Key in the 4-digit confidential code which you have entered when you activate CHILD LOCK mode.
   If you key in an incorrect code, all items in the child lock menu can be selected, but it is not possible to change any one of them. If you key in a correct code, CHANNEL will be automatically highlighted.
   Tips : If you forget your confidential code, enter the universal code 8888.
5. Key in a channel number which you wish to unlock.
6. Scroll down with the key to highlight LOCK.
7. Press or key to select NO to unlock the selected channel.
8. Repeat steps 5 to 7 for other channels which you wish to unlock. Once you have completed, proceed to the next step.
9. Exit with the OSD key.

Surf

There are 2 selectable functions:

1. Surf : Create a list of channels (maximum 8) whereby when you press the A/CH key on the remote control, you are able to quickly view through all these channels.
2. A/CH : When this is selected and if you press the A/CH key on the remote control, you are able to see the previously watched channel.

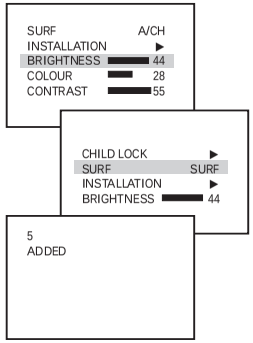

Creating a surf list

1. Call up 1st level menu with the MENU key.
2. Scroll up with the key to highlight SURF.
3. Select SURF with the or key.
4. Exit with the OSD key.
5. Select a channel. Press the SURF key within 4 seconds or while the channel number is still being displayed. “ADDED“ appears below the channel number. This means the channel is added to the surf list.
6. Repeat step 5 for other channels which you wish to add to the surf list.

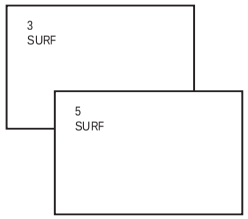

How to call up channels in the surf list

1. Press the A/CH key once and the TV will switch to the next channel which is on the surf list OR

   Press and hold the A/CH key to cycle through all the channels on the surf list.

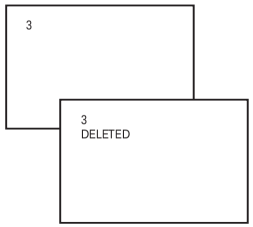

Deleting channels from a surf list

1. Press the A/CH key to call up channels in the surf list.
2. As soon as you find the channel you wish to delete, press the A/CH key within 4 seconds or while the channel number is still being displayed. “DELETED“ appears below the channel number. This means the channel is deleted from the surf list.
3. Repeat step 1 to 2 for other channels which you wish to delete from the surf list.

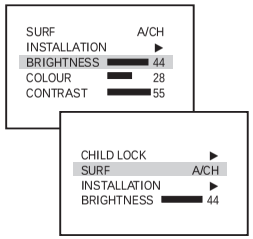

Selecting alternate channel (A/CH)

1. Call up 1st level menu with the MENU key.
2. Scroll up with the key to highlight SURF.
3. Select A/CH with the or key.
4. Exit with the OSD key.

When you are viewing a channel (e.g channel number 6) and if you wish to go back to the previous channel (e.g. channel number 3), press the A/CH key once. If you wish to go back to channel number 6 again, press the A/CH key again.

11 Abbreviations

(R-Y)_OUT	R-Y output from chroma demodulator
uC	Microcomputer
AQUA	Aquadaq layer on the outside of the picture tube
AV_MUTE	Signal to mute the sound on the Audio-out cinch
AVL_AV2/AVL	Switching signal from UP to the Auto Volume leveller on the ITT on BTSC Panel or Rear Cinch I/P 2 width CVBS. R and Sound
B_TXT_OSD	Blue TXT or OSD signal from (C to the video controller IC7225-5C
BASS	Control signal for BASS
BCI	Beam Current information
BG/1_or_BG/0 K	Monochrome TV system sound carrier + 5.5 MHz (BG), Sound carrier + 6 MHz(I), Sound carrier + 6.5 MHz (DK)
BL_TXT_OSD	Fast blanking signal to IC7725-5C to display OSD and TXT
BLACKSTR_SW	Black stretch switch
BS1	TV band selection 1 signal
BS2	TV band selection 2 signal
CHROMA_O/ NTSC_SW	Switch on signal for NTSC chroma oscillator (3.575 MHz)
CHROMA_1/BG/L	Switch on signal for BG/L chroma oscillator (3.582 MHz)
CHROMA_1/ STATUS	Switch on signal for NTSC chroma oscillator (3.579 MHz)
CHROMA_2/ STATUS	Signal to select the correct system in case of trinorma
CVBS_EXT1	CVBS external 1 input signal
CVBS_EXT2	CVBS external 2 signal
CVBS_IN	CVBS internal 1 (from tuner)
CVBS_OUT	CVBS output signal
CVBS_OUT_1	CVBS output signal 1
CVBS_SOUND	CVBS for inter carrier sound detector
CVBS_TXT	CVBS for TXT processing in uC
DISCHARGE	To have a fast discharge after switching off the set
EAR	Earth
EEPROM	Electrical Erasable Programmable Read Only Memory
ESD	Electrical Static Discharge
ff	Filament (heater voltage) from LOT to the picture tube
FL_A	Filament voltage for CRT
G_TXT_OSD	Green TXT or OSD signal from the uC to IC7225-5C
GND	Ground
GRD_LOT	Ground of LOT
HOR.FLYBACK	Horizontal flyback pulse used for looking the horizontal oscillator
12C	Digital Control bus of the microcomputer
IF	Intermediate frequency signal for sound processing
INT/EXT	Switching signal for Internal or external audio + video switching
L_EXT1	Audio left external 1
LEFT_OUT	Audio left out
MOD_L_1N1	SCART I/P 1 in left
MOD_L_1N2	SCART I/P 2 in left
MOD_R_1N1	SCART I/P 1 in righ
MOD_L_1N2	SCART I/P 2 in left
MONO/STROBE/ BG_L	Strobe signal for HEF 4094 on multi-mono sound panel
MONO_OUT	Audio mono out
NTSC	NTSC colour system
PAL/SECAM	PAL or SECAM colour system
R_TXT_OSD	Blue TXT or OSD signal from the uC to the video controller IC7225 5C
RAM	Random Access Memory
RESET1	Reset signal for the uC
RF_AGC	Automatic gain control signal I for tuner
RIGHT_OUT	Audio right ou
ROM	Read Only Memory
SAM	Service Alignment Mode
SANDCASTLE	Sand castle signal from IC7225-5D to delay line IC7255 and SECAM chrominance decoder IC7241.
SCL	Clock line of the 12C-bus
SDA	Data line of the 12C-bus
SDM	Service Default Mode; predefined mode for faultfinding
SECAM_REF	SECAM reference
SID/STA/LL	Sound identification / stereo available / france system "L"
SIF	Sound IF signal for FM demodulator
STANDBY	Switching signal from uC "low" for standby (power supply will be switched to stand-by mode), "high" for normal operation
TREBLE	Treble control signal
V_TUNE	Tuning voltage for tuner
VFB	Vertical flyback pulse
VFL	50Hz vertical flyback pulse used to inform the uC that flyback takes place. This is important for OSD and TXT
VG2	Voltage on grid 2 of the picture tube
VOLUME	Control signal (from uC, but on DC level via RC nework) for volume control of sound processing in sound panel

Mainpanel

Various

0136Δ	4822 492 70289	SPRING K12
0139Δ	4822 276 13603	SWITCH,MAINS
0140Δ	4822 256 92053	FUSE HOLDER CLICK (PROM)
0141Δ	4822 265 20723	B2P3-VH
0142Δ	4822 265 20723	B2P3-VH
0151	4822 256 10336	LED HOLDER
0177	4822 492 70788	FIX IC
0189	4822 402 10844	PCB RELIEF BRACKET
0191	4822 267 31014	HEADPHONE SOCKET
0191	4822 267 51391	F PHONE 3.5MM STEREO
0210Δ	4822 492 70289	SPRING K12
0211Δ	4822 492 70289	SPRING K12
0231	4822 265 10453	9P
1000Δ	4822 210 10737	UV1355/I
1000Δ	4822 210 10771	UV1355S/I
1000Δ	4822 210 10803	UV1336B/AIS
1000Δ	4822 210 10804	UV1336B/AFS
1000Δ	4822 210 10814	UV1336B/A F
1007Δ	4822 212 11691	FRAME 29"
1015	4822 242 10357	OFWK2960M
1015	4822 242 10874	45.750 000 MHz
1015	4822 242 81556	B39380-K2953-M100
1015	4822 242 81964	B39389-G1984-M100
1102Δ	4822 242 10316	SFSF6,5MHz B-TF21
1104	4822 242 10314	SFSH5,5MHz B-TF21
1104	4822 242 10362	SFSH6,0MHz B-TF21
1104	4822 242 10363	SFSH4,5MHz B-TF21
1206	4822 242 81572	TPS6,0MB-TF21
1207	4822 242 81712	TPWA04B
1207	4822 242 81978	TPS4,5MB-TF21
1208	4822 242 81301	TPS6,5MB-TF21
1209	4822 242 81978	TPS4,5MB-TF21
1275	4822 242 10327	HC49/U 3M575611
1275	4822 242 10356	4,433619MHz HC49/U
1275	4822 242 10695	4 433 619 MHz
1277	4822 242 10355	3,579545MHz HC49/U
1277	4822 242 10776	3.579 545 MHz
1278	4822 242 10326	HC49/U 3M582056
1300	4822 242 10359	CSB503F58
1500	4822 070 35002	218005.(5A)
1572Δ	4822 071 51002	19372(1A)
1600	4822 276 13775	SWITCH
1601	4822 276 13775	SWITCH
1602	4822 276 13775	SWITCH
1603	4822 276 13775	SWITCH
1670	4822 218 11573	GP1U28QP
1681	4822 242 10694	12 000 000 MHz

⊣⊢

2002	4822 124 80791	µF 470µF 16V 20% 85C DXH=8X11.5
2050	4822 126 13486	µF 15pF 2% 63V
2128	5322 126 10465	µF 3.9nF 10% 50V
2198	4822 122 33805	µF 330pF 10% 63V
2199	4822 122 33805	µF 330pF 10% 63V
2209	4822 126 13473	µF 220nF 80-20% 50V
2215	4822 126 13061	µF 220nF 20% 25V
2224	4822 124 11576	µF 220µF 20% 25V
2275	4822 126 13486	µF 15pF 2% 63V
2277	4822 126 13486	µF 15pF 2% 63V
2278	4822 126 13486	µF 15pF 2% 63V
2283Δ	4822 126 12944	µF 47nF 10% 50V
2284Δ	4822 126 12944	µF 47nF 10% 50V
2285Δ	4822 126 12944	µF 47nF 10% 50V
2315	4822 126 13482	µF 470nF 80/20% 16V
2316	4822 126 13482	µF 470nF 80/20% 16V
2323Δ	4822 121 43823	µF 470nF 5% 50V
2324Δ	4822 121 43823	µF 470nF 5% 50V
2325Δ	4822 121 43823	µF 470nF 5% 50V
2326Δ	4822 121 43823	µF 470nF 5% 50V
2327	4822 126 13482	µF 470nF 80/20% 16V
2328	4822 126 13482	µF 470nF 80/20% 16V
2337	4822 122 32646	µF 5.6nF 10% 50V
2339	4822 126 14043	µF 1µF 20% 16V
2342	4822 124 80061	µF 1000µF 20% 25V
2346	4822 126 14043	µF 1µF 20% 16V
2347	4822 126 14043	µF 1µF 20% 16V
2348	4822 126 14043	µF 1µF 20% 16V
2349	4822 126 13473	µF 220nF 80-20% 50V
2351	4822 126 13482	µF 470nF 80/20% 16V
2353	4822 124 81151	µF 22µF 50V
2354	4822 126 13473	µF 220nF 80-20% 50V
2355	4822 126 14043	µF 1µF 20% 16V
2357	4822 126 13482	µF 470nF 80/20% 16V
2359	4822 126 13482	µF 470nF 80/20% 16V
2369Δ	4822 126 12944	µF 47nF 10% 50V
2383	4822 126 14043	µF 1µF 20% 16V
2385	4822 126 14043	µF 1µF 20% 16V
2387	4822 126 13482	µF 470nF 80/20% 16V
2388	4822 122 32646	µF 5.6nF 10% 50V
2401	5322 121 42386	µF 100nF 5% 63V
2402	5322 121 42386	µF 100nF 5% 63V
2403	4822 124 40255	µF 100µF 20% 63V
2404Δ	4822 126 12171	µF 3.3nF 20% 1KV
2409	4822 121 42408	µF 220nF 5% 63V
2409	4822 121 42868	µF 220nF 5% 50V
2422	5322 122 32331	µF 1nF 10% 100V
2426	5322 121 42386	µF 100nF 5% 63V
2448Δ	4822 122 31173	µF 220pF 10% 500V
2450	4822 124 41739	µF 47µF 20% 160V
2451Δ	4822 122 30103	µF 22nF 80% 63V
2451	4822 126 13513	µF 8.2nF 10% 50V
2456	4822 121 43526	µF 47nF 5% 250V
2457Δ	4822 121 10518	µF 250V 390nF 5%
2457Δ	4822 121 43888	µF 360nF 5% 250V
2458	4822 124 41984	µF 10µF 250V
2459Δ	4822 126 13185	µF 680pF 10% 500V
2460	4822 126 12638	µF 6.8nF 10% B 50V
2461	4822 122 31175	µF 1nF 10% 500V
2462	4822 121 43526	µF 47nF 5% 250V
2463Δ	4822 126 12239	µF 560pF 10% 2KV
2463Δ	4822 126 14053	µF 1nF 10% 2KV
2463Δ	4822 126 14184	µF 820pF 10% 2KV
2464	4822 121 10739	µF 2.2µF 5% 160V MPP479
2465Δ	4822 121 70637	µF 8.2nF 5% 1600V
2465Δ	4822 121 70649	µF 9.1nF 5% 1.6KV
2466	4822 121 40483	µF 10nF 10% 400V
2467Δ	4822 121 40488	µF 22nF 10% 400V
2468Δ	5322 121 42532	µF 18nF 10% 400V
2468Δ	5322 121 44151	µF 33nF 10% 400V
2469	4822 121 51319	µF 1µF 10% 63V
2470	4822 122 31177	µF 470pF 10% 500V
2471	4822 121 51252	µF 470nF 5% 63V
2472	5322 124 41379	µF 2.2µF 20% 50V
2475	4822 126 14096	µF 560nF 5% 250V
2480Δ	4822 121 40518	µF 100nF 10% 250V
2481Δ	4822 121 43823	µF 470nF 5% 50V
2484	5322 121 42386	µF 100nF 5% 63V
2485	4822 124 11534	µF 4.7µF 20% 250V
2486	4822 124 80791	µF 470µF 16V 20% 85C DXH=8X11.5
2487	4822 124 11769	µF 220µF 20% 50V
2488	4822 124 80791	µF 470µF 16V 20% 85C DXH=8X11.5
2489	4822 124 80062	µF 470µF 20% 35V
2490	4822 122 31177	µF 470pF 10% 500V
2491	4822 122 31177	µF 470pF 10% 500V
2500Δ	4822 126 13589	µF 470nF 275V
2501	4822 121 70141	µF 33nF 5% 400V
2502Δ	4822 126 12793	µF 2.2nF 10% 2KV
2504Δ	4822 126 12793	µF 2.2nF 10% 2KV
2505Δ	4822 126 12793	µF 2.2nF 10% 2KV
2507Δ	4822 126 11524	µF 1.5nF 10% 1KV
2508	4822 121 10486	µF 330µF 20% 450V
2508Δ	4822 124 41748	µF 220µF 20% 400V
2508Δ	4822 124 42168	µF 330µF 400V
2510Δ	4822 126 11524	µF 1.5nF 10% 1KV
2511Δ	4822 126 13337	µF 220pF 10% 1KV
2517	5322 122 32331	µF 1nF 10% 100V
2518Δ	4822 122 50116	µF 470pF 10% 1KV
2524	4822 122 33805	µF 330pF 10% 63V
2530	4822 124 11571	µF 1µF 20% 50V
2531	4822 121 10738	µF 1nF 2% 50V
2540	4822 124 80059	µF 100µF 20% 25V
2541	4822 124 81089	µF 2.2µF 20% 160V
2545Δ	4822 126 14049	µF 1.5nF 20% 250V
2550Δ	4822 126 14149	µF 330pF 10%R 1KV
2551	4822 124 42336	µF 47µF 20% 160V
2554	4822 126 13061	µF 220nF 20% 25V
2560Δ	4822 126 14149	µF 330pF 10%R 1KV
2561	4822 124 81145	16V S 1000µF PM20
2562	4822 124 41097	µF 220µF 20% 16V
2563	4822 124 80499	µF 100µF 20% 16V
2571	4822 124 80707	µF 2200µF 20% 25V
2575	4822 126 14087	µF 100nF 10% 63V
2601	4822 126 13061	µF 220nF 20% 25V
2610	4822 126 13473	µF 220nF 80-20% 50V
2615	4822 126 13473	µF 220nF 80-20% 50V
2650	4822 126 13482	µF 470nF 80/20% 16V
2660	5322 126 10184	µF 680P 5% 50V.
2661	5322 126 10184	µF 680P 5% 50V.
2680	4822 126 13061	µF 220nF 20% 25V
2684	4822 126 13061	µF 220nF 20% 25V

⊐□⊏

3171	4822 051 20394	390k 5% 0.1W
3178	4822 051 20394	390k 5% 0.1W
3234Δ	4822 052 10228	2Ω2 5% 0.33W
3249	4822 051 20106	10M 5% 0.1W
3277	4822 117 11437	8k2 1% 0.1W
3342	4822 051 20475	4M7 5% 0.1W
3346Δ	4822 051 20121	120Ω 5% 0.1W
3360Δ	4822 051 20121	120Ω 5% 0.1W
3401	4822 111 31051	3Ω3 5%
3402	4822 111 31051	3Ω3 5%
3403	4822 111 31051	3Ω3 5%
3405Δ	4822 050 21802	1k8 1% 0.6W
3405	4822 050 22202	2k2 1% 0.6W
3407Δ	4822 050 21802	1k8 1% 0.6W
3407	4822 050 22202	2k2 1% 0.6W
3409Δ	4822 052 10158	1Ω5 5% 0.33W
3430Δ	4822 052 10478	4Ω7 5% 0.33W
3443	4822 051 20684	680k 5% 0.1W
3451Δ	4822 053 11479	47Ω 5% 2W
3453	4822 117 12822	4Ω7 5% 5W
3454	4822 053 11333	33k 5% 2W
3462	4822 117 12514	6k8 5% 5W
3465Δ	4822 052 10109	10Ω 5% 0.33W
3480	4822 050 22703	27k 1% 0.6W
3481Δ	4822 050 24303	43k 1% 0.6W
3481	4822 050 28203	82k 1% 0.6W
3482Δ	4822 050 24303	43k 1% 0.6W
3482	4822 050 25603	56k 1% 0.6W
3485Δ	4822 052 10478	4Ω7 5% 0.33W
3486Δ	4822 052 11108	1Ω 5% 0.5W
3487Δ	4822 052 11108	1Ω 5% 0.5W
3488Δ	4822 052 10478	4Ω7 5% 0.33W
3490Δ	4822 052 10338	3Ω3 5% 0.33W
3491Δ	4822 052 11108	1Ω 5% 0.5W
3492Δ	4822 052 11108	1Ω 5% 0.5W
3501	4822 117 12181	470Ω 20% 0.5W
3502Δ	4822 053 21225	2M2 5% 0.5W
3504	4822 117 12728	9Ω 200V S 100R
3505	4822 252 60151	SURGE PROTECT DSP-510N-A21F A
3507	4822 116 82776	2Ω2
3509	4822 117 11488	33k 5% 3W
3510	4822 117 11488	33k 5% 3W
3511	4822 117 12568	RESISTOR 7 WATT(MOX)
3513	4822 117 11719	180k
3514	4822 050 28204	820k 1% 0.6W
3515Δ	4822 117 12765	4Ω7 20% 3W1
3518Δ	4822 116 83027	R22 5% 3W
3525Δ	4822 052 10339	33Ω 5% 0.33W
3542Δ	4822 053 21475	4M7 5% 0.5W
3552Δ	4822 051 20332	3k3 5% 0.1W
3553Δ	4822 051 20121	120Ω 5% 0.1W
3554	4822 117 11139	1k5 1% 0.1W
3571	4822 050 21504	150k 1% 0.6W
3571	4822 050 21604	160k 1% 0.6W
3572	4822 101 11186	470Ω 30%LIN 0.1W
3601	4822 116 90885	8k2X6
3602	4822 117 12168	2k2 X 6
3603	4822 117 12167	8k2 X 12
3685	4822 051 20683	68k 5% 0.1W

⌒

5003	4822 157 11518	5.6µH 5% 2.3X3.4
5040	4822 157 70439	FOR MK2 AND ANUB S.
5051	4822 152 20547	IND FXD LAL04 A 0U68 PM20 A
5054	4822 157 11519	1.2µH 5% 2.3X3.4
5101	4822 157 11515	12µH 5% 2.3X3.4
5101	4822 157 11516	15µH 5% 2.3X3.4
5101	4822 157 11526	22µH 5% 2.3X3.4
5205	4822 157 11517	10µH 5% 2.3X3.4
5206	4822 157 11518	5.6µH 5% 2.3X3.4
5206	4822 157 11524	8.2µH 5% 2.3X3.4
5260	4822 157 11326	IF COIL 77.8mH z
5260	4822 157 11514	76mH z
5260	4822 157 11527	IFT COIL 91.5mH z
5260	4822 157 11528	IFT COIL 77.8mH z
5445Δ	4822 146 10961	FLYBACK TRANSFORMER
5445Δ	4822 146 10963	FLYBACK TRANSFORMER
5445Δ	4822 146 10966	FLYBACK TRANSFORMER POWER
5451	4822 157 11521	33µH 10% 8X10
5451	4822 157 71266	27µH
5457	4822 157 11522	LIN. CORRECTOR COIL
5457	4822 157 11546	LINEARITY CORRECTOR COIL
5461Δ	4822 142 40351	LINE DRIVE TRAFO -CU15
5463Δ	4822 157 71405	BRIDGE COIL -CI15
5465Δ	4822 140 10509	BRIDGE COIL U15
5470Δ	4822 158 10728	TRANSF. 11µH
5471	4822 157 11547	1000µH 10% 8X10
5480	5322 157 51687	FXDIND A 04 39µH PM10 (UAW)
5500Δ	4822 157 11523	LINE 5mH /2A
5502	4822 157 10476	DMF-2820H
5502	4822 157 11538	10mH 2A
5515	4822 157 11477	LAL02TB2R2J
5516	4822 157 60171	HF70BTL3.5X9R
5518	4822 526 10704	100mH z
5520	4822 526 10704	100mH z
5540	4822 157 71249	IND FXD LAL02 A 4U7 PM5 A
5545Δ	4822 146 10964	TFM SMT 130V
5545Δ	4822 157 11529	SMT LAYER WIRE
5550	4822 157 60171	HF70BTL3.5X9R
5551	4822 157 71401	27µH
5572	4822 157 60171	HF70BTL3.5X9R
5573	4822 157 60171	HF70BTL3.5X9R
5574	4822 157 11327	1U 20%
5574	4822 157 11408	2.2µH 10% 8X10
5603	4822 157 11524	8.2µH 5% 2.3X3.4
5620	4822 157 11525	6.8µH 5% 2.3X3.4

6040	5322 130 34955	BA482
6112Δ	4822 130 83757	BAS216
6114Δ	4822 130 83757	BAS216
6263Δ	4822 130 83757	BAS216
6264Δ	4822 130 83757	BAS216
6265Δ	4822 130 83757	BAS216
6401	4822 130 42488	BYD33D
6402Δ	4822 130 31024	BZX79-B18
6403	4822 130 42488	BYD33D
6421	4822 130 34258	BZX79-B56
6460Δ	4822 130 41275	BY228
6461Δ	4822 130 41602	BYW95C
6465	4822 130 42606	BYD33J
6466	4822 130 42606	BYD33J
6470	4822 130 30862	BZX79-B9V1
6480	4822 130 34379	BZX79-B27
6485	4822 130 42488	BYD33D
6486	5322 130 31938	BYV27-200
6487	4822 130 42488	BYD33D
6488	4822 130 42488	BYD33D
6490	5322 130 31938	BYV27-200
6505Δ	4822 130 10741	GBU6J
6505	4822 130 11185	GBU4J
6507	4822 130 42606	BYD33J
6508	4822 130 42606	BYD33J
6511	4822 130 41487	BYV95C
6514Δ	4822 130 31024	BZX79-B18
6515	4822 130 42606	BYD33J
6517	4822 130 42606	BYD33J
6550	4822 130 10754	BY229X-600
6560	4822 130 10256	EGP20DL-5300
6570	4822 130 10256	EGP20DL-5300
6590	4822 130 10256	EGP20DL-5300
6653	4822 130 34382	BZX79-B8V2
6663Δ	4822 130 82029	LTL307P

7001	5322 130 60508	BC857B
7002	5322 130 60508	BC857B
7003	5322 130 60508	BC857B
7004	5322 130 60508	BC857B
7005	4822 130 60511	BC847B
7101	4822 130 60511	BC847B
7115	4822 130 60511	BC847B
7117	4822 130 60511	BC847B
7118	4822 130 60511	BC847B
7204	4822 130 60511	BC847B
7214	4822 130 60511	BC847B
7215	4822 130 60511	BC847B
7216	5322 130 60508	BC857B
7217	5322 130 60508	BC857B
7220	4822 130 60511	BC847B
7225	4822 209 15685	TDA8844/N1
7225	4822 209 15828	TDA8347C/N3
7225	4822 209 16309	TDA8377/N3
7225	4822 209 16311	TDA8375A/N3
7255	4822 209 12635	TDA4665/V4
7260	5322 130 60508	BC857B
7277Δ	4822 130 42353	BSF19-F2
7278Δ	4822 130 42353	BSF19-F2
7310	4822 209 33293	TDA9860/V2
7311	4822 209 13646	TDA7057AQ/N2
7312	4822 209 32918	AN7318S
7314	4822 130 60511	BC847B
7315	4822 209 13181	TDA9850/V1
7317Δ	4822 130 40981	BC337-25
7401	4822 209 13176	TDA9302H
7401	4822 209 16352	STV9379FA
7420	5322 130 60508	BC857B
7460	4822 130 63569	BU1508DX
7461	4822 130 42159	BF819
7470	4822 130 63726	MTP3055EFI
7480Δ	4822 130 40981	BC337-25
7481	4822 130 44568	BC557B
7482	5322 130 60508	BC857B
7518	4822 130 63698	STH8NA60FI

12 Spareparts list

7520	4822 209 15684	MC44603AP
7541	4822 209 15829	TDA8139
7542	5322 130 60508	BC857B
7570	4822 209 81397	TL431CLPST
7581Δ	4822 209 71634	TCDT1101G
7600	4822 209 15831	P87C766BDR/01
7600	4822 209 16308	P87C770AAR/40
7600	4822 209 16312	SAA5297PS/051
7600	4822 209 16459	P83C366BDR/016
7603	4822 130 60511	BC847B
7608	4822 130 60511	BC847B
7610Δ	4822 209 73852	PMBT2369
7620	4822 209 15822	ST24W04B6
7650	4822 130 60511	BC847B
7651	4822 130 60511	BC847B
7681	4822 130 60511	BC847B
7682	4822 130 60511	BC847B

CRT panel

2830	4822 121 51473	µF 470nF 20% 63V
2840	4822 124 11565	µF 10µF 20% 250V
2841	4822 126 13599	µF 3.3nF 10% 500V
2843Δ	4822 126 12278	µF 3300pF 10%) 2KV
2845	4822 122 31175	µF 1nF 10% 500V

3832	4822 117 12516	680Ω 2%0.5W
3834	4822 117 12516	680Ω 2%0.5W
3836	4822 117 12516	680Ω 2%0.5W
3840Δ	4822 052 10109	10Ω 5% 0.33W
3841Δ	4822 052 10108	1Ω 5% 0.33W
3842Δ	4822 052 10108	1Ω 5% 0.33W
3843	4822 117 11896	1k5 20% 0.5W
3845	4822 117 13016	1M A/50V MAX 115V

Audio panel

7830	4822 209 16321	TDA6107Q/N1
1204	4822 242 10769	18.432 000 MHz

2214	4822 126 13486	µF 15pF 2% 63V
2216	4822 126 13061	µF 220nF 20% 25V
2217	4822 126 13061	µF 220nF 20% 25V
2220	4822 126 13061	µF 220nF 20% 25V
2221	4822 126 13061	µF 220nF 20% 25V
2225	5322 122 32286	µF 3.3pF 5% 50V
2226	5322 122 32286	µF 3.3pF 5% 50V
2239Δ	4822 122 33172	µF 390pF 5% 50V
2240Δ	4822 122 33172	µF 390pF 5% 50V

3243	4822 117 11437	8k2 1% 0.1W
3244	5322 117 12487	1k RC12G 1% 0.125W
3247Δ	4822 052 10109	10Ω 5% 0.33W

5206	4822 157 11515	12µH 5% 2.3X3.4

7202	4822 209 15832	MSP3410D-PP-B4
7202	4822 209 16307	MSP3400C-C8
7209	4822 130 60511	BC847B
7214Δ	4822 130 40981	BC337-25
7215	4822 130 60511	BC847B
7216	4822 130 60511	BC847B